FEASIBILITY OF APPLICATION OF PYROLYSIS AND PLASMA GASIFICATION TECHNOLOGIES IN ARMENIA

Natella Mirzoyan, PhD

2019

TABLE OF CONTENT

ABBREVIATIONS

AMD	Armenian Dram
APC	Advanced Process Control
ATEX	Appareils destinés à être utilisés en Atmosphères Explosives
CE	Circular Economy
CEPA	Comprehensive and Enhanced Partnership Agreement
CIS	The Commonwealth of Independent States
cSt	Centistokes
CU	Customs Unit
EBRD	European Bank for Reconstruction and Development
EIA	Environmental Impact Assessment
EIB	European Investment Bank
EPA	Environmental Protection Agency
E5P	Eastern Europe Energy Efficiency and Environment Partnership
EU	European Union
FIT	Feed-In-Tariffs
FPBO	Fast Pyrolysis Bio-Oil
GDP	Gross Domestic Product
GIZ	Gesellschaft fur Internationale Zusammenarbeit
HAZOP	Hazard and Operability Analysis
HHV	Higher Heating Value
HSH	Health and Safety Hazard
HSE	Health, Safety and Environment
IWM	Integrated Waste Management
IPPC	Integrated Pollution Prevention and Control
LCA	Life Cycle Assessment
LE	Linear Economy
LCV	Lower Calorific Value
kg/l	Kilogram per Liter
MJ/kg	Mega Joule per Kilogram

MSW	Municipal Solid Waste
NIF	Neighborhood Investment Facility
NGO	Non-Govrnmental Organization
PAH	Poly-Aromatic Halogen
PCB	Poly-Chlorinated Byphenol
PM	Particulate Matter
POP	Persistent Organic Pollutant
PVC	Poly-Vinil Chloride
P&G	Pyrolysis and Gasification
RA	Republic of Armenia
SNCO	State Non-Commercial Organization
UK	United Kingdom
USA	United States of America
USD	United States Dollar
VOC	Volatile Organic Compound
WtE	Waste to Energy

CHEMICAL FORMULAS

Ammonia	NH_3
Arsenic	As
Carbon dioxide	CO_2
Carbon monoxide	CO
Cadmium	Cd
Chromium	Cr
Cobalt	Co
Hydrogen	H_2
Hydrogen chloride	HCl
Hydrogen fluoride	HF
Hydrogen sulfide	H_2S
Lead	Pb
Mercury	Hg
Nitrogen	N_2
Nitrogen dioxide	NO_2
Nitric oxide	NO
Nitrogen oxides	NO_x
Nickel	Ni
Oxygen	O_2
Sulfur	S
Sulfur dioxide	SO_2
Thallium	Tl
Zinc	Zn

EXECUTIVE SUMMARY

Annually, approximately 650,000 tons of Municipal Solid Waste (MSW) is produced in the Republic of Armenia (RA), and the almost entire MSW is disposed of in 340 dumpsites across the country, none of which correspond to the minimum sanitary standards. There is no appropriate country-level waste management, including separate collection of hazardous and non-hazardous waste streams, waste sorting, recycling and treatment in the country. As a result, MSW often contains hazardous compounds, qualifying mixed MSW as a 4th category hazardous waste in RA. Due to the lack of appropriate waste management strategies, with potential strong environmental and health risks, MSW management is currently one of the biggest challenges in RA.

Shrinking natural resources and the growing threats of climate change and pollution led to the development of Pyrolysis and Gasification (P&G) technologies for extracting usable energy products, such as syngas, bio-oil, and biochar, from the waste. These technologies differ from the wider-used incineration method by higher operating temperatures in the absence of or at low airflow.

The current feasibility study evaluates P&G technologies for the potential application to the MSW in RA.

Pyrolysis and Gasification technologies were evaluated in both international context and in terms of its potential to be applied in Armenia.

Worldwide, P&G of different homogenous feedstocks have been practiced on a commercial scale for several decades, but implementation of the P&G technologies to treat MSW is a relatively new approach. Decades of attempts to apply P&G to MSW treatment in numerous countries have exposed the underlying complications with this approach due to several characteristics of mixed MSW, such as extreme heterogeneousness, variability in quantities and composition, and general high organic fractions and moisture contents. These characteristics present challenges to P&G technologies, such as maintaining process stability (particularly reaction vessel temperatures), insufficient quantity, quality and potential marketability of the products, and production of corrosive and toxic by-products and related problems in

environmental and health and safety performance. Multiple studies from all over the world report that health and safety risks associated with Fires, explosions and excessive pollution have put workers and local residents at a particularly high risk. Most importantly, failed P&G schemes have led to tens of millions of dollars of investors' money being lost. As a result, commercial-scale P&G plants for mixed MSW never materialized and multiple technical and operational limitations have been described for these operations.

Additionally, several problems associated with the main preconditions for successful P&G implementation have been identified in the Armenian context. These include:

- *Waste management:* In waste hierarchy approach WtE projects are considered complementary technologies for the recovery of energy from the remaining non-recyclable MSW fractions, and should therefore not compete with waste reduction, reuse, and material recycling measures. Implementation of P&G technologies for mixed MSW treatment contradicts the concepts of integrated waste management and waste hierarchy, current internationally accepted practices of waste management. Added to this is the complete lack of an advanced waste management system in RA. When waste collection, separation, hazardous waste management are missing, or additional transportation time of the feedstock to P&G plants is needed, additional investments in creating the infrastructure can affect the economic performance of P&G. Of specific interest for Armenia is the separation of hazardous and non-combustible waste fractions that, if not practiced, reduce the performance of P&G facilities. Higher levels of hazardous waste in MSW will also affect both the product quality in P&G and the environmental performance of the facility.
- *Technical capacity:* The P&G operations require experienced management of technologically complex facilities and well-trained technical staff. The lack of fully functional complex waste and wastewater treatment systems in Armenia raises questions about the RA capability of handling large, complex waste treatment infrastructure, and suggest a need for the long term support of technology suppliers in case of the foreign P&G technologies entering the market.
- *Waste quantity and quality:* Waste quantities and quality, including Lower Calorific Values (LCV) and Higher Heating Values (HHV), and moisture content of combustible

fraction are the direct parameters that affect P&G process success in terms of product quantities and quality. Autothermic combustion (self-sustaining combustion without additional fuels) of MSW must be ensured throughout the year for P&G. In the context of the P&G technology use, there is limited data on MSW generation and composition in Armenia, with no direct measurements of the exact waste generation, and incomplete and hectic information on waste composition. The lack of exact information on waste generation in RA suggests high uncertainties in planning the P&G facility operational capacities and should be addressed prior to planning the facility. System starting up and shutting down, or intermittent operation due to inaccurate waste quantity calculations are the most risky periods of P&G operations in terms of fire, explosion and toxic emissions.

The preliminary data based on the currently available information demonstrates variable (24.0-83.6%; 57.4% average) combustible fraction in the mixed MSW. Internal moisture content in the feedstock ranges between 33.6% and 49.7 %, with an average of 39.0%. In Armenia, LCV and HHV of mixed MSW also demonstrate high variation ranging from 4.38 MJ/kg to 12.0 MJ/kg LCV with an average of 9.04 MJ/kg, and from 4.74 MJ/kg to 13.4 MJ/kg HHV, with an average of 9.94 MJ/kg. P&G technologies with an advanced integrated drying stage are able to treat wet MSW with a calorific value of about 7.0 MJ/kg, but in this case the economic performance of the facility should be carefully considered.

The high moisture and food/garden waste content in MSW is generally associated with several issues such as lower energy production levels that might barely cover the operation of these energy-intensive systems, and production of syngas and bio-oil so low in calorific value that they cannot even serve as fuel.

Therefore, there is a strong need for novel, more comprehensive data on MSW quantity and quality in RA and their incorporation of the economic feasibility calculations of P&G facilities.

- *Product market:* The physical and chemical properties of the P&G products, i.e., syngas, bio-oil, and biochar, depend on the quality of feedstock and temperature regime of the treatment. For a homogenous feedstock, the quantity and quality of these products are possible to anticipate and model, suggesting stability in their performance in the already established market. However, in the case of a heterogeneous feedstock with variable

composition, such as mixed MSW in RA, product quality and quantity can vary over time and affect their market value and stability.

There are product quality issues related to P&G technologies for MSW as a feedstock. As a result of relatively high moisture and oxygen content, as well as higher levels of acidic gas-forming compounds, such as plastics, P&G products from MSW treatment are characterized by lower LCV and HHV, higher water content, and increased acidity. While low LCV and HHV directly reflect the product quality as a fuel, the high acidity of the products suggests strong corrosion potential during the use of these products. These characteristics challenge the market viability of all products with a subsequent necessity of quality upgrades to make them competitive in the product market.

Added to these are several problems associated with the presence of hazardous compounds in the feedstock, a probable case for MSW in RA. The research has demonstrated that for the feedstocks with high content of heavy metals and Persistent Organic Pollutants (POPs), undesirable levels of these compounds and their incomplete degradation products, such as furans, dioxins, benzene are detected in all 3 P&G products. This suggests that upgrading the products to correspond to emission limits and market standard is a crucial part of the P&G technology operation, that will negatively impact the economic viability of the processes, and cause increased environmental, health and hazard risks emerging during product use.

The final disposal of process residues is another major issue in the implementation of P&G in Armenia, raising the same concerns of the elevated levels of hazardous compounds in these residues.

- *Regulatory framework:* As new technologies entering the Armenian market, there is no well-established P&G specific legal framework in the country.

  Implementation of P&G plants for mixed MSW treatment falls under the scope of numerous general laws and regulations including those related to Waste management, Environmental protection, Fertilizers, Renewable Energy, Quality of equipment, Planning, commissioning and operation of industrial plants, and Occupational health and safety. Upgrading and tailoring the legislative framework to specificities of P&G are necessary for successful P&G implementation in RA.

Perhaps the most important problem related to the P&G regulations is the legislative framework of the product quality in the context of MSW use. MSW in RA is categorized as a hazardous waste due to the lack of separation of hazardous compounds. As such the technologies related to MSW, as well as the products of MSW treatment should be covered by regulation where the hazardous nature of MSW is taken into account. For example, the tendency of heavy metal accumulation in biochar during P&G should be reflected in the regulation of the product use but is not addressed in the current legislation. Similarly, regulations of syngas and bio-oil quality assuring the safe use of these products are necessary.

- *Environmental monitoring and enforcement:* One of the most important indicators in the feasibility of P&G technology implementation in Armenia is environmental monitoring and enforcement of environmental regulations. Even in the cases when the responsibility of economic performance lays on the P&G operator, removing this variable from the success of the P&G implementation, a successful environmental and related health and hazard performance is a mandatory fundamental part of the feasibility.

  In RA, P&G facilities are subject to mandatory EIA. The operator submits an application for a permit to the Ministry of Environment, which conducts an assessment of the application and accompanying documents. Based on the assessment results, a permit is granted or rejected. Adherence to the terms of the permits is controlled by the Inspectorate for Nature Protection and Mineral Resources adjacent to the Government of RA. The Inspectorate for Nature Protection and Mineral Resources exercises supervision prescribed by law.

  However, the RA is currently lacking behind in adherence with the standards and enforcement of environmental laws and regulations, many issues arise with insufficient monitoring due to the lack of the personnel and available technologies for online and off-line detection of the entire range of possible environmental emissions and pollutants expected to be produced during P&G of mixed MSW, and an absence of a platform for environmental compliance information sharing makes the enforcement of compliance with environmental standards complicated.

Fixing individual issues listed above does not guarantee success, instead, it is a combined approach that would be most beneficial. It must be noted, however, that each of the issues

presents significant organizational and financial challenges for which Armenia might not be well suited.

The extreme risks associated with the current state-of-the-art P&G operations together with organizational issues around waste management in RA make it infeasible to establish mixed MSW-based P&G technologies in the country.

In addition to the largely missing preconditions for mixed MSW treatment in P&G facilities in RA, the hazardous nature of mixed MSW raises questions about the environmental and health and safety performance of P&G operations and products throughout the entire life cycle.

Given the reported shortcomings and failures of the current internationally available MSW-treating P&G plants, technological improvements/upgrades and proven long-term successful operations of these plants are the main prerequisites for implementation of P&G technologies for processing mixed MSW worldwide and in RA. As such, the introduction of P&G facilities for MSW treatment in RA should be not rushed until international experience demonstrates that safe and long-term operations are possible.

Nevertheless, if improved and well operating P&G plants with a history of failure-free operation become available in the market, a strong national framework for successful and, most importantly, safe operations of P&G technologies that treat MSW should be established prior to the introduction of these facilities in RA. This framework should include several aspects such as defined national waste strategy, strong regulatory background along with the enforcement of regulations and standards, and technological expertise.

Taking into account international experiences of mixed MSW treatment in P&G facilities, and the current organizational and legislative state of waste management in RA, at ***the national level*** the following recommendations are made:

- Defining national waste strategy, that incorporates waste hierarchy concepts, and practices separation of hazardous and non-hazardous waste fractions should be the first step in successful waste management, including economically and environmentally feasible P&G applications.

- Careful selection of investors/P&G operators and technologies with a strong record of failure-free long-term P&G operation, with experience in management of technologically complex facilities and well-trained technical staff, should be practiced.
- Due to multiple high profile failure cases for economic reasons, RA government is strongly advised to avoid provision of financial help/subsidies to the investors/operators of P&G technologies treating MSW.
- Environmental framework legislation in terms of planning and tendering, obligations of operators, prerequisites for permitting and safety and environmental standards should be assessed and tailored to the RA context prior to the P&G technology introduction to the country. Perhaps the most important regulation that should be developed is the standards for the P&G products that account for the hazardous nature of MSW in Armenia.
- The establishment of strong environmental monitoring and enforcement of environmental standards, backed by technical and professional capacity to detect the entire range of potential pollutants should precede the building and operation of P&G facilities in the country.
- Financial guarantees should be embodied in permits for successful shutdown and dismantling of failed P&G facilities to avoid becoming a graveyard for these facilities.

1. INTRODUCTION

1.1. Background information on Armenia

Picture 1.1. Map of Republic of Armenia

The Republic of Armenia (RA) is a small country situated between 38°50-41°18N and 43°27-46°37E. Its territory covers approximately 29,742 km^2 (11,500 square miles), of which 68.9% is agricultural land. It is landlocked by Georgia to the north, Azerbaijan to the east and southwest, Turkey to the west, and Iran to the south (Pic.1.1). Armenia is a mountainous country with a maximum elevation of 4,090 m above sea level at the peak of Mount Aragats. The lowest point of elevation is 400 m above sea level in the Debed River.

The country is located in the sub-tropical zone. Annual precipitation ranges from 250 mm at lower elevations to 900 mm at higher elevations. Relative humidity averages 60%, ranging from 44% in summer to 80% in winter. The average annual temperature ranges from 2.7°C on Mt. Aragats to 14°C at Meghri in the northeast. The highest maximum temperatures can reach above 43°C in Meghri and Artashat and the lowest minimum temperature can reach bellow -42°C in Paghakn and Ashotsk.

After the collapse of the Soviet Union, Armenia's economy was recovering steadily, though the lack of proper state governance procedures and market performance were at the bottom. However, the start of the 21st century was quite promising; during a short span of time Armenia was able to experience double-digit growth of Gross Domestic Product (GDP) and micro-financial stability, which led the country to be considered as the fastest progressing country in The Commonwealth of Independent States (CIS). The 2008 world economic crisis negatively affected the Armenian economy in the last quarter of 2008. As a consequence, already in the second quarter of 2009 economic recession in Armenia topped its highest level of 21.8%, mainly driven by declines in construction and industry sectors, with a 14.1% GDP fall in 2009 compared

to 2008. However, anti-crisis measures initiated by the Armenian government shaped preconditions for certain positive growth and the Armenian economy started to recover slowly since 2010. In 2018, GDP was approximately 12.4 billion USD, approximately 8% increase compared to 2017 and about 90% increase compared to 2009. Per capita GDP is approximately 4,182 USD[1].

The average de jure population size of RA at the beginning of 2018 was 2,972,700 people. The urban areas are more populated, mainly due to the centralization of cultural, educational and business institutions/organizations in the cities. Armenia's largest city, Yerevan, has a population of approximately 1.08 million people. The country has an average population density of 101 people per km^2, with the highest density in Yerevan.

The literacy rate is very high, mainly with high rates of primary, secondary, as well as tertiary enrollment. Approximately 95% of the population are ethnic Armenians; there are also Kurds, Assyrians, Greeks, Georgians, Belarusians, etc.

1.2. Current Municipal Solid Waste management in Armenia

Solid waste, particularly Municipal Solid Waste (MSW) management is currently one of the biggest challenges in RA.

According to the" Law on local self government" RA (2002)[2], waste collection and disposal service are one of the mandatory functions of local governments. Local self-governing bodies (communities) are mandated to carry out waste collection and sanitary cleaning in communities, including definition of waste collection fee; approval of the procedure for waste collection; and issuance of permits for waste collection and transportation. The "Law on local self government in Yerevan" RA (2008)[3] grants independent local self-governance status to Yerevan, including the organization of its own waste collection and disposal service.

By the decision of the Community Council, waste collection and sanitary cleaning works are financed from the community budget. The waste collection fee is a mandatory fee to community

[1] https://countryeconomy.com/countries/groups/cis
[2] https://www.arlis.am/DocumentView.aspx?DocID=125341
[3] https://www.arlis.am/DocumentView.aspx?docID=73279

budgets or extra-budgetary funds. It ranges from 50-400 AMD (0.1-0.8 USD) per month for each resident at residential buildings or 5-25 AMD (0.01-0.05 USD) for one m^2.

Picture 1.2. Current Municipal Solid Waste collection and transportation in Armenia

Annually, approximately 650,000 tons of MSW is produced in Armenia. There is no country-level waste sorting and recycling, and MSW often contains hazardous waste materials. According to the Order of the Minister of Nature Protection of RA "On Approval of the list of waste classified based on hazardousness" (2006)[4], mixed, unclassified solid waste (unclassified waste generated from permanent and temporary residential areas and unclassified household waste from organizations) is considered a 4th category hazardous waste.

Organized waste collection is carried out in all urban and most rural communities. According to the information provided by the Ministry of Territorial Administration and Infrastructure of RA, only 1.7% of the RA population (48,075 people in 60 rural communities) lack access to waste collection services. This does not necessarily imply an absence of waste management in these communities. For example, some of the communities are engaged in self-organized waste removal, such as composting organic fractions of the waste in gardens, and burning the combustible fraction, a practice that is illegal in RA.

Picture 1.3. Nubarashen dumpsite
(*photo by Gayane Mkrtchyan, JAM*)

In urban areas and in several large rural communities MSW is disposed of in waste

[4] https://www.arlis.am/DocumentView.aspx?DocID=35639

collection containers. Often these containers do not comply with sanitary norms (Pic. 1.2). Other waste disposal/collection practices in rural communities include disposal of MSW in specific pre-collection points, from where the MSW is periodically transported to larger dumpsites; and use of a "Horning" system, where MSW is delivered by the population directly to the collection vehicle.

Waste is collected/transported by specialized collection vehicles (in large urban areas), small trucks or tractors. Except for Yerevan, waste collection companies are not equipped with modern equipment and do not have up to date vehicles (Pic. 1.2).

As a result of the absence of the country-level waste sorting and recycling, almost entire MSW is disposed of to the dumpsites. As of March 2019, there are 340 dumpsites in Armenia, with the largest (50 ha area) being Nubarashen dumpsite (Pic.1.3), that receives MSW from Yerevan.

Overall, there are no uniform management strategies in dumpsites. None of the MSW dumpsites in RA corresponds to the minimum sanitary standards. Most of the dumpsites are open, poorly managed and are prone to fires in dry and hot weather, whereas some of the smaller dumpsites are covered by soil and are better managed. The government of RA is constantly engaged in activities aimed at the improvement of the mixed MSW management in the country. The actions include, but are not limited to: legal amendments, inclusion of more settlements into the waste collection system, improvement of contractual relations with legal entities, inventory of landfills and dumpsites and closure of dumpsites, and promoting projects implemented in waste collection.

In the framework of EIB, EBRD and EU Neighborhood Investment Facility (NIF) financed "Solid waste management in Yerevan" project a new sanitary landfill is planned to be built in Nubarashen, adjacent to the current dumpsite. Simultaneously, Nubarashen and Ajapnyak dumpsites serving Yerevan will be closed. The construction has not commenced yet, a tender process has been started to select the company that will both construct the landfill in 2020 (construction is expected to last 2 years) and operate it for the first 5 years. Initially, the landfill will have 1 or 2 cells, receiving unsorted mixed MSW; new cells will be built upon necessity, and the old ones will be cultivated.

Another major landfill construction is planned in the framework of EBRD, EU NIF and E5P financed "Solid waste management in Kotayq and Gegharkunik" project. The sanitary landfill

will be built in Hrazdan city and will receive mixed MSW from Kotayq and Gegharkunik regions. To achieve successful operation, 2 transfer stations in Abovyan and Martuni cities will be built. The tender process will start in the 3rd quarter of 2019, and the beginning of the construction is forecast for March 2021.

Although there is no formal waste sorting and recycling in RA, recyclable materials in MSW from large cities and large dumpsites are sorted out either by formal, e.g., small organizations and Non-Governmental Organizations (NGOs), or informal, e.g., waste pickers and scavengers, sectors, and paper/cardboard, glass and plastic recycling are continuously growing in the country.

1.3. Approach and structure of this paper

In 2016 the government of RA has approved "Strategy for development of the municipal solid waste management system for 2017-2036". The strategy is aimed at the development of MSW management system in compliance with EU standards, including sanitation services and landfills. Moreover, according to the Governmental Decree of RA N650 "On approval of the program measures for 2019-2023 activities of the Government of RA", a strategy on sanitation system of the RA is to be elaborated by the end of August 2019.

The current project aims at the investigation of the feasibility of Pyrolysis and Gasification (P&G) technologies for treatment of mixed MSW in Armenia, and their potential to tackle Armenian MSW problems.

The study analyzes the international experience of MSW treatment by P&G, and evaluates the main preconditions for the transfer and implementation of P&G technologies in RA, with specific emphases on mixed MSW. Additionally, the potential factors that could affect the feasibility of these technologies in the current changing waste management situation are described.

The organization of the study with the breakdown of the areas discussed are summarized below:

Chapter 1
- Background information on RA and overview of the current MSW management practices are described.

Chapter 2
- Pyrolysis and Plasma Gasification technologies, including operational conditions and products, are described.

Chapter 3
- The 5 main factors that affect the success of P&G technologies in treating mixed MSW, such as Technical and operational; Economic; Environmental; Occupational health and safety hazard; and Regulatory factors are explained.

Chapter 4
- International experiences of P&G for MSW are analyzed with an emphasis on high profile failure, and successful cases.

Chapter 5
- Preconditions for the P&G of mixed MSW in Armenia, based on 9 different indicators are evaluated.

Chapter 6
- Feasibility of P&G of mixed MSW is evaluated.

Chapter 7
- Factors that can affect feasibility of P&G of MSW in the changing waste management framework are described.

Chapter 8
- The main conclusion of the study are described and recommendations are made.

2. TECHNOLOGY DESCRIPTION OF PYROLYSIS AND PLASMA GASIFICATION

Brief history of P&G

Although P&G technologies are gaining momentum in the last 40-50 years, they are not new developments.

Pyrolysis has been used for turning wood into charcoal since ancient time. With gradual development over centuaries, Pyrolysis became largely known in Europe in the 14th century. Initially, producing char was the sole objective of wood carbonization. However, new byproducts (tars, acetic acid, methanol, and acetone) were obtained from wood as civilization progressed and new reactors and bio-oil recovery systems were designed. At the end of the 18th century, technologies to recover and utilize the condensable Pyrolysis products were relatively well developed. In the 19th century the "acid-wood industry", also known as the "wood distillation industry" was established to produce charcoal and liquid by-products (e.g. acetic acid, methanol and acetone). The oil crisis during the 1970's forced reconsideration of biomass Pyrolysis as a technology to reduce dependency on fossil oil.

Gasification technology was developed in the early 1800s to produce coal gas, or town gas, which was used for lighting. The coal gas was later used for industrial energy applications and still later for the production of electricity. Gasification of wood or woody biomass was used extensively by Japan and Germany during the Second World War to produce liquid fuels, and Gasification of coal in a process known as Fischer Tropsche is still an important process by which s liquid fuel as well as some lubricants and waxes are still produced.

2.1. Technology description

Growing concerns regarding shrinking natural resources, contribution of improper waste management to global climate change and environmental deterioration have triggered the consideration of waste as a resource and application of waste to energy technology (WtE) to tackle these issues.

WtE refers to a family of technologies that treat waste to recover energy in the form of heat, electricity or alternative fuels such as biogas and biofuel and includes incineration/combustion, co-processing, anaerobic digestion, landfill gas collection, and pyrolysis/gasification. These five technologies apply to different waste streams and have different functions and characteristics. The applicability of these technologies must be assessed independently based on the local context and waste stream in question.

Anaerobic digestion is the decomposition of organic fraction of the waste through microorganisms in the absence of free

oxygen, resulting in the production of biogas. Landfill gas collection represents a different type of WtE technology, as it is essentially a component of controlled operation of sanitary landfills, allowing to partially mitigate negative climate impacts of the greenhouse gas emissions from landfills.

Figure 2.1. Schematic representation of Pyrolysis, Gasification and combustion process (*redrawn from Knoef, 2005*[5])

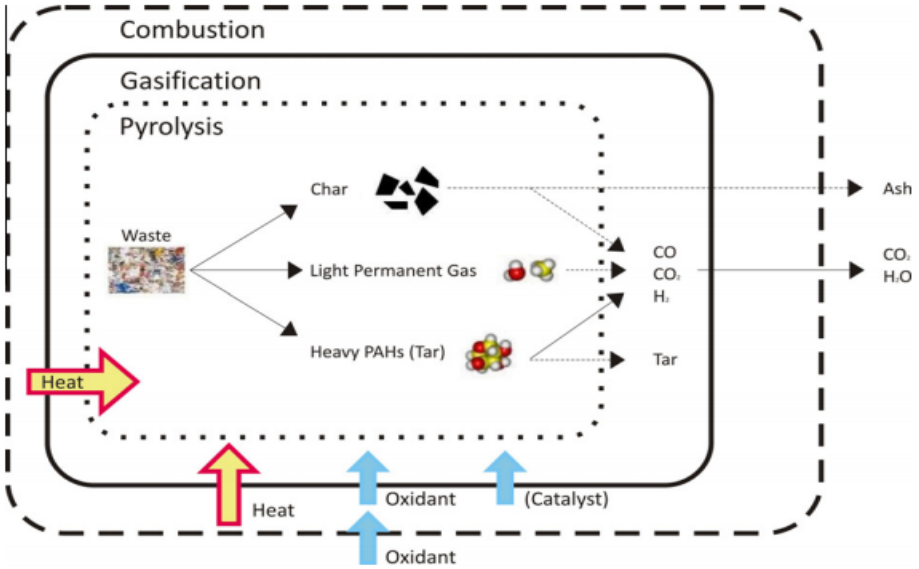

Co-processing is the use of waste-derived materials to replace natural mineral resources (material recycling) and/or traditional fossil fuels such as coal, fuel oil and natural gas (energy recovery) in industrial processes. Incineration/combustion is the burning of waste in the presence of the air under controlled conditions, with the main result of heat production. Pyrolysis and Gasification are also thermal treatments of waste but are done under oxygen controlled conditions (Fig. 2.1).

The main differences in operational conditions of P&G are air/oxygen regimes and applied temperature. These conditions affect the success of operations, and most importantly, P&G product types, quantities, and qualities.

Pyrolysis is generally carried out in the absence of air/oxygen at temperatures between approximately 400 and 1000°C. Gasification systems typically operate at temperatures ranging

[5] Handbook on Biomass Gasification. Handbook biomass gasification. H. Knoef (Ed.). The Netherlands: BTG biomass technology group.

between approximately 700 and 1,800°C (air fed Gasification) or 2,000 to 2,800°C (Plasma or Plasma Arc systems) at low air to fuel ratios.

Other than oxygen and temperature regimes, many different factors affect the success of P&G applications and should be considered in the construction and operation of P&G plants. These factors are:

- Feedstock composition
- Feedstock preparation and particle size
- Reactor heating rate
- Residence time
- Plant configuration, such as:
  - Feed system-dry or slurry
  - Feedstock-reactant flow geometry
  - Mineral removal system-dry ash or slag
  - Heat generation and transfer method-direct or indirect
  - Syngas cleanup system-temperatures and processes used to remove sulfur, nitrogen, particulates, and other compounds that may impact the suitability of the syngas for specific applications (i.e., turbine and fuel cell for electric power generation, hydrogen production, liquid fuel production, or chemical production)..

As a result, the actual plant design and configuration of P&G facilities differ considerably between technology providers. Yet, all P&G facilities are designed to include the following stages: feedstock reception, handling and pre-treatment, thermal treatment reactor, gas and residue treatment; and energy recovery/utilization of syngas.

Feedstock reception, handling, and pre-treatment

The P&G processes treat the biodegradable materials present in MSW (e.g. paper, cardboard, putrescible waste, green waste, wood) as well as plastics/rubber fraction. Non-combustible materials, such as metals and glass, are removed prior to the treatment reactor stage. The feed material might require some sorting and processing to remove non-combustible fraction, excess moisture, and most probably should include shredding/granulation to reduce the feedstock size.

Thermal treatment reactor

The thermal treatment process, whether Pyrolysis or Gasification, produce different gaseous and solid products, as well as solid residues. The composition of the products and solid residue depend on the process conditions employed, which includes operating temperature, oxygen level, heating rate and residence time in the reactor.

The main types of thermal treatment units available and their categorization may be based either on solid movement methods or heat transfer methods. In terms of solid movement, reactors can be:

- Type A: No solid movement through the reactor during Pyrolysis (batch reactors)
- Type B: Moving bed (shaft furnaces)
- Type C: Movement caused by mechanical forces (e.g., rotary kiln, rotating screw, etc.)
- Type D**:** Movement caused by fluid flow (e.g., fluidized bed, spouted bed, entrained bed, etc.)

P&G reactors can also be classified depending on the way heat is supplied to biomass as follows:

- Type 1: Part of the raw material burns inside the reactor to provide the heat needed to carbonize the remainder.
- Type 2: Direct heat transfer from hot gases produced by the combustion of one or more of the Pyrolysis products or any other fuel outside the reactor.
- Type 3: Direct heat transfer from inert hot material (hot gases or sand introduced into the reactor).
- Type 4: Indirect heat transfer through the reactor walls (i.e. external heat source due to combustion of one or more Pyrolysis products or any other fuel).

Several common P&G reactor types and their application and operating conditions are summarized in Table 2.1.

Table 2.1. Common Pyrolysis and Gasification reactor types and their application

Reactor	Typical application	Operating conditions
Rotating Kiln	Pyrolysis	Typically operates at temperatures of between 300 – 850°C. The unit can accommodate large-sized feed material (200 mm). The kiln is heated externally and waste is fed in from one end of the kiln which slowly rotates creating a tumbling action. This mixes the waste and ensures contact with the heating surface and the gases inside the kiln.
Heated Tube	Pyrolysis	The tubes are heated externally and temperatures as high as 800°C are used. The process can accommodate large-sized feed material. The waste passes through the tube at a set speed to ensure the Pyrolysis process is complete.
Surface Contact	Pyrolysis	Small-sized feed material is required and therefore significant pre-treatment is necessary. The process operates at high temperatures, and the small size of the feed results in high heating rates. The application of this technology is to maximize the rate of Pyrolysis.
Fluidized Bed	Gasification	This technology may be used for Gasification or combustion processes. The bed is a mass of particles (typically alumina) that has similar characteristics to a moving fluid. This is achieved by blowing hot gases through the bed of particles. This system provides good mixing and heat transfer to the incoming waste. Waste is pre-treated to remove large-sized material.
Fixed Bed	Gasification	There is a range of different reactor types that come under this heading. A typical example is a grate system where the feed passes along the grate and hot gases pass through the bed of waste heating it.

Gas and residue treatment stages

Solid discharge from P&G facilities mainly includes metals, carbon and ash, and slag. The carbon amount is not very high during the Gasification, but is significant for Pyrolysis.
Larger particles of solids in the thermal treatment reactor are usually discharged as bottom ash and slag. Lighter ash is usually collected when the gas is separated with the use of cyclones and

ultimately filters. In addition, volatile metals will be carried in the gas until such point that the gas is cooled for them to be sufficiently condensed.

Energy recovery/utilization of syngas

One of the potential benefits of P&G is that the syngas can be used in a number of different ways. In Pyrolysis application, gas can be used in the facility to generate heat. In Gasification, in terms of producing energy, the most common configuration is to burn the syngas in a boiler to generate steam. The steam can then be used to generate electricity by passing it through a steam turbine and, if there is a demand local to the plant, for heating. Using the heat in addition to generating electricity improves the overall energy efficiency of the system significantly. Pyrolysis and Gasification have several advantages compared to incineration. A few disadvantages have been identified as well.

Advantages of P&G compared to incineration

- Limited oxygen use results in fewer air emissions.
- Plants are modular; made up of small units which can be added to or taken away as waste streams or volumes change and are therefore more flexible and can operate at a smaller scale than mass-burn incinerators.
- Produce more useful products – gases, bio-oils and solid char

Disadvantages of P&G compared to incineration

- Unless they only deal with truly residual waste, the processes will undermine recycling and composting.
- Any fuel produced will not make up for the energy spent in manufacturing new products.
- Disposal of ash and other by-products may be required.

2.1.1. Pyrolysis

Unlike Incineration and Gasification, Pyrolysis takes place in the total absence of oxygen, except in cases where partial combustion is allowed to provide the thermal energy needed for this

process. Actually, the Pyrolysis process is highly sensitive to the presence of air and accidental incursions of air can result in process upsets and increase the risk of explosive reactions.

Fundamentally, Pyrolysis involves the heating of organic materials to temperatures greater than 400°C. At these temperatures, organic materials thermally decompose, releasing a vapor phase and a residual solid phase (biochar) (Pic. 2.4). On cooling the Pyrolysis vapor, polar and high molecular-weight compounds condense out as liquid (bio-oil) (Pic. 2.4) while low-molecular-weight volatile compounds remain in the gas phase (syngas or pyrogas). In terms of energy recovery, Pyrolysis is similar to conventional Gasification and is higher performing than Incineration.

According to the heating rate, slow, intermediate, fast and flash Pyrolysis technologies are defined. As a rule of thumb, slow Pyrolysis utilizes low temperatures around 400°C over a long period of time and is aimed primarily to produce biochar through carbonization with syngas as a major co-product. Product yields from slow Pyrolysis are approximately 35% biochar, 30% bio-oil, and 35% gaseous products.

Figure 2.2. Distribution and proportion of Pyrolysis products (*source: Knoef, 2005*)

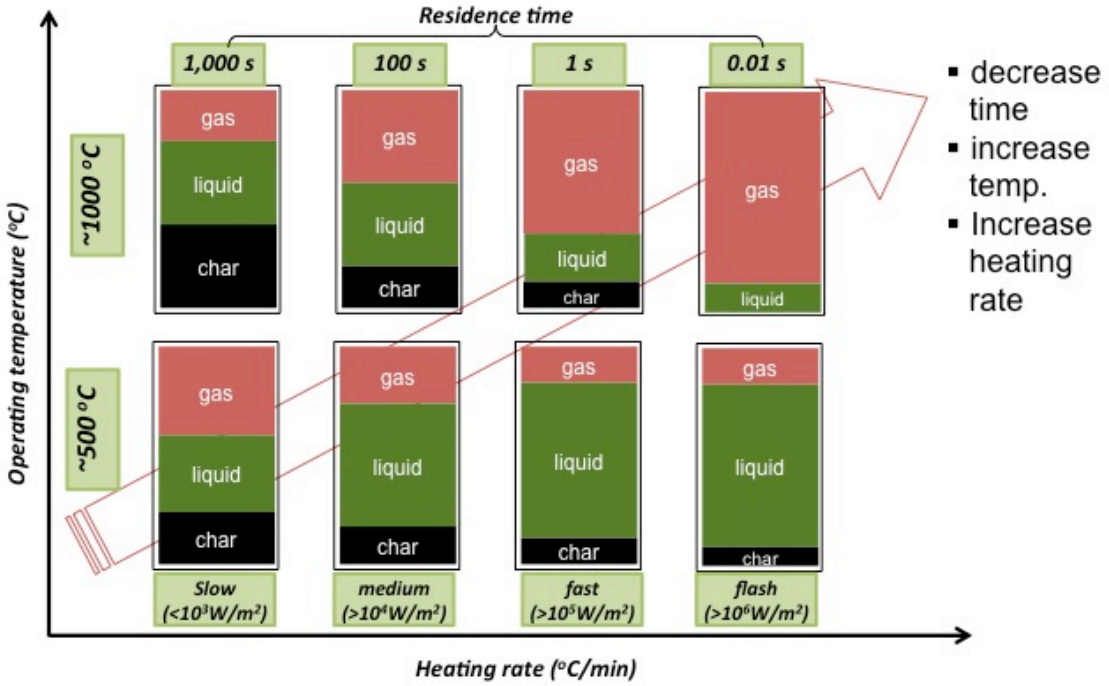

In fast Pyrolysis primarily bio-oil and syngas are produced. In this process, biomass is very rapidly heated (~1000-10,000°C/s) to a temperature around 650°C-1,000 °C depending if bio-oil

or gas products are desired. Product gases are quickly removed and quenched. Fast Pyrolysis product yields are typically 50–70% bio-oil, 10–30% biochar, and 15–20% syngas by mass. Distribution and proportion of Pyrolysis products under different temperature and time regimes are demonstrated in Fig. 2.2.

Fast Pyrolysis is currently the most commonly used Pyrolysis type. A typical diagram of a fast Pyrolysis plant is presented in Pic. 2.1.

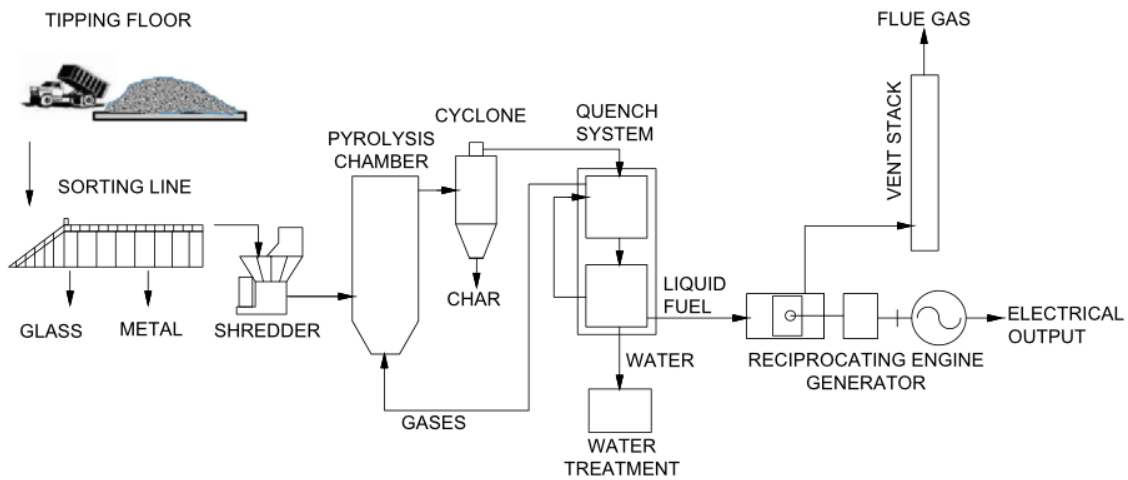

Picture 2.1. Process diagram for a fast Pyrolysis system (*source: Knoef, 2005*)

2.1.2. Gasification

Gasification is a process wherein organic carbonaceous materials are dissociated at high temperatures in an oxygen-starved thermal reactor to form a gas. It requires a medium for reaction, which can be gas or supercritical water. Gaseous media include air, oxygen, subcritical steam, or a mixture of these. If the thermal reactor is air fed (as opposed to oxygen fed only), the syngas stream also contains nitrogen gas. This latter form of syngas, which includes nitrogen (N_2) in relatively large quantities, is more correctly referred to as producer gas, but in accordance with common usage, it will be referred to as syngas in this document.

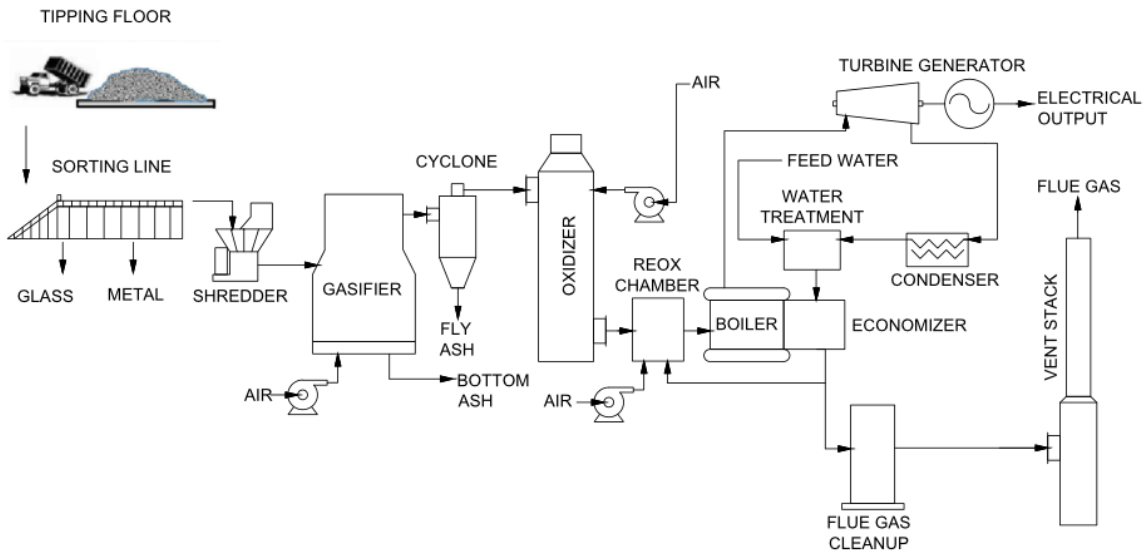

Picture 2.2. Process diagram for an air fed Gasification plant using a heat recovery boiler and steam turbine to generate electrical power (*source: Knoef, 2005*)

While Gasification processes vary considerably, typical air fed gasifier reactors operate at temperatures between approximately 700 and 1,000°C. The initial step, devolatilization, is similar to the initial step in the Pyrolysis reaction. Depending on the Gasification process, the devolatilization step can take place in a separate reactor upstream on the Gasification reaction or simultaneously with the Gasification reaction. Because of the higher temperatures involved, thermochemical reactions associated with air fed Gasification are more energetic than those associated with Pyrolysis. The high rates of heat transfer achievable during the partial oxidation process within the gasifier are such that this process is often considered an autothermal method of Gasification. Often, between 20 and 30% of the feed mass flow is consumed to provide the energy needed to pyrolyze the feed and complete the Gasification of the pyrolytic products. Some Gasification processes also use indirect heating, avoiding combustion of the feed material in the Gasification reactor and avoiding the dilution of the product gas with nitrogen and excess air. The process by which standard operation of air fed Gasification can be accomplished is shown in Pic. 2.2.

Plasma Arc Gasification is a Gasification technology that uses an electric arc to produce high temperatures within the reactor to convert organic fuel material to synthesis gas and melt the

residual inorganic materials, which form a vitreous solid upon cooling. The electric arc is maintained between electrodes in a firing device designated as a torch, or in some cases, between the torch electrodes and the walls of the reactor (transfer arc mode) (Pic. 2.3). Plasma Arc Gasification processes are characterized by higher reaction temperatures and higher parasitic power loads required to operate the torches; production of inert vitrified solid (after cooling) from inorganic components in the fuel; requirement for a low moisture fuel that is consistent in composition. Because of the extremely high temperatures achievable in plasma arc, it was believed that little or no waste sorting would be required because all components of the municipal solid waste stream would eventually leave the reactor as a gas or as a molten slag. Yet, as has been shown by the operation of small specialty facilities and demonstration MSW-based Plasma Arc Gasification plants, the consistency of the waste has a direct impact on the performance of a plasma facility. Waste streams that include large amounts of inorganic materials such as poorly sorted construction waste, metals, and glass, result in increased slag production and decreased syngas production. The heat energy that is required to melt these inorganics is lost since the molten slag does not contribute to syngas production.

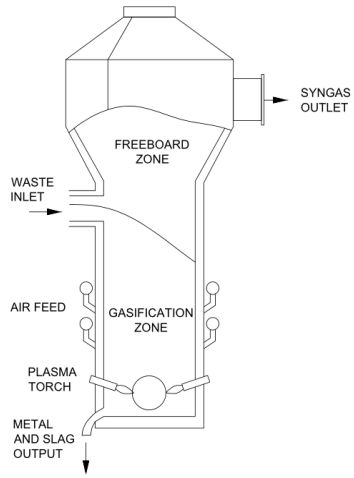

Picture 2.3. Plasma Arc

Syngas or producer gas is the main product of the Gasification.

2.2. Products of Pyrolysis and Gasification and their market

The physical and chemical properties of the P&G products, i.e., syngas, bio-oil, and biochar, depend on the quality of feedstock and temperature regime of the treatment. For a homogenous feedstock, the quantity and quality of these products are possible to anticipate and model, suggesting stability in their performance in the already established market. However, in the case of a feedstock with variable composition, such as MSW, product quality and quantity can vary over time and affect their market value and stability.

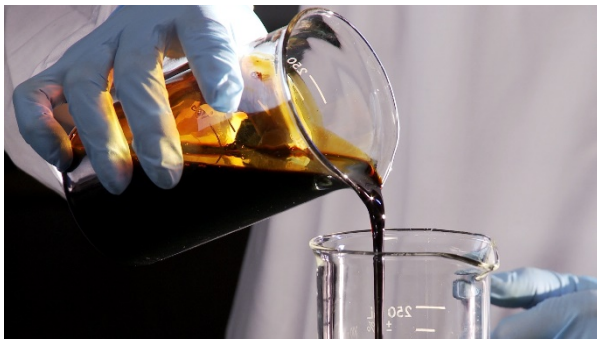

Picture 2.4. Biochar (left) and bio-oil (right)

In addition to the issues related to the heterogeneity and variability of waste, there are product quality issues related to P&G technologies for MSW as a feedstock. The relatively high moisture and oxygen content, as well as higher levels of acidic gas-forming compounds, such as plastics, Pyrolysis and Gasification products from MSW treatment are characterized by lower Higher Heating Value (HHV) and Lower Calorific Value (LCV), higher water content, and increased acidity. While lower HHV and LCV directly reflect the product quality as a fuel, the high acidity of the products suggests stronger corrosion potential during the use of these products. These characteristics challenge the market viability of all products with a subsequent need for quality upgrades to make them competitive in the product market.

Added to these are several problems associated with the presence of hazardous compounds in the feedstock. The research has demonstrated that for the feedstocks with high content of heavy metals and Persistent Organic Pollutants (POPs), undesirable levels of these compounds and their incomplete degradation products, such as furans, dioxins, benzene are detected in all 3 P&G products. Volatile and semi-volatile metals can be found in syngas and bio-oil. Logically, non-volatile metals are concentrated in biochar. Bio-oil and biochar have been shown to also contain undesirable levels of POPs and their incomplete degradation products if these compounds are present in the feedstock. In fact Pyrolysis of hazardous biomass/waste has been used to concentrate heavy metals in biochar as a method of reducing environmental and health impact of these hazards. The same ability of biochar to concentrate hazardous compounds, such as POPs is used in bioremediation process. Additionally, leaching of hazardous compounds from biochar to soil has been described during the application of hazardous compounds containing biochar application. This suggests that upgrading the products to correspond to emission limits and

market standard is a crucial part of the P&G technology operation and negatively impacts the economic viability of the processes.

Syngas produced in Pyrolysis or Gasification can be used as an alternative renewable source of fuel for industrial combustion processes, as well as for internal combustion engines (Fig. 2.4). In power generation, transportation, and other sectors, gaseous fuel can be used in converted commercial petrol and diesel engines. Another potential use of the syngas is the chemical transformation to produce methanol and hydrogen, or conversion into synthetic fuel via the Fischer–Tropsche process.

Pyrolysis bio-oil is the liquid produced from the condensation of vapor of a Pyrolysis reaction and is composed of a complex mixture of oxygenated compounds. Bio-oil contains various chemical functional groups such as carbonyls carboxyls and phenolics that provide both potentials and challenges for utilization. Generally, bio-oil quality is considered inferior compared to fossil oils. Physical properties and characteristics of pyrolysis bio-oil is presented in Table 2.1.

Table 2.1. Physical properties and characteristics of Pyrolysis bio-oil

Properties	Oil Characteristics	Reasons
Appearance	Dark red-brown to dark green	Micro-carbon and chemical composition in oil
Odor	Distinctive odor—an acrid smoky smell	Lower molecular weight aldehydes and acids
Density	Very high compared to fossil fuel Pyrolysis bio-oil: 1.2 kg/liter Fossil oil: 0.85 kg/lit	High moisture and heavy molecule contamination
Viscosity	Can vary from as low as 25 centistokes (cSt) to as high as 1000 cSt	Wide range of feedstock, water content and the amount of light ends collected
Heating value	Significantly lower than fossil oil	High oxygen content

Aging	Viscosity increase, volatility decrease, phase separation and deposition of gum occur with time	Complex structure and high pH value
Miscibility	Miscible with polar solvent but totally immiscible with petroleum fuel	Polar in nature

The bio-oil product has a number of potential applications (Fig. 2.4), mainly as a substitute for fossil fuels to generate heat, power, and chemicals. At the moment these are in varying stages of development, with only heat and power having been demonstrated on a commercial scale. The long-term vision is to focus more on the bio-refinery concept where Pyrolysis oil is (one of the) raw materials for bio-based chemicals and automotive fuels.

Furnaces and boilers are commonly used for heat and power generation. Technologically they are less efficient than turbines and engines. On the other hand, furnaces and boilers can operate with a great variety of fuels ranging from natural gas and petroleum distillates to sawdust and coal/water slurries. Therefore, bio-oil seems to be more suitable for boiler applications as long as it meets acceptable emission levels, economic viability, and consistent quality characteristics.
With a strong potential to replace fossil fuel, numerous unknown factors are affecting the thermo-physical properties of Pyrolysis bio-oil, and pose limitations for the fuel quality; phase separation; stability; fouling issues on thermal processing.

Figure 2.4. Various applications of Pyrolysis bio-oil

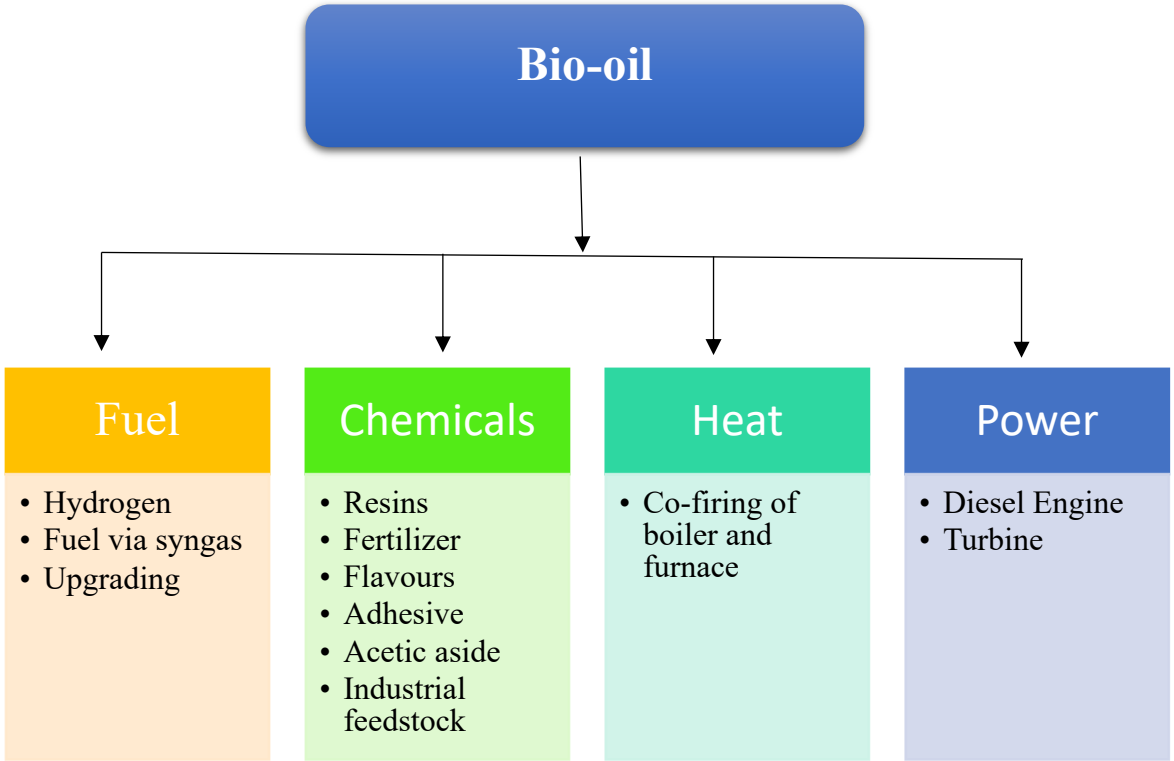

Pyrolysis bio-oil in boiler applications to replace heavy fuel oil, although currently implemented, faces the following challenges:

- Due to high viscosity and high solids and water content, bio-oils exhibit worse combustion performances in boilers;
- Different Pyrolysis bio-oils differ in combustion behavior and exhaust gas emissions;
- Particulate Matter (PM) emissions from Pyrolysis bio-oil in boiler applications are higher than from burning heavy fuel oils;
- Some modifications of the burners and boilers are required for proper utilization of Pyrolysis bio-oil in heat and power generation.

Application of conventional diesel engines and turbines are an efficient way of converting liquid fuels into power, heat, and cooling. The properties of Pyrolysis oil are very different from diesel, and obviously, some modifications are needed to the engine:

- Pyrolysis oil is acidic and therefore all piping and devices in contact with Pyrolysis oil should be corrosion resistant;
- Oil contains typically 20-25 % water (by weight), lubrication is poor and small particles (< 20 μm) might be present;
- The viscosity of Pyrolysis oil is higher than of mineral diesel, and strongly depends on water content and temperature;
- Pyrolysis oil is sensitive to re-polymerization, in particular, if temperature rises above 50-60°C. Re-polymerization may result in small particles in the oil and increase in viscosity;
- Pyrolysis oil is more difficult to ignite, and higher temperatures are required at the end of the compression stage to achieve complete combustion;
- The HHV of Pyrolysis oil is about half the value of diesel.

Upgrading of bio-oil to an engine/turbine fuel quality is technically feasible but requires extra investments well as infrastructure for refining.

Typically, biochar is produced as a solid by-product material in a dry carbonization process like Pyrolysis. In addition to the use of biochar as fuel for heat generation, recently its potential as a soil amendment to increase the crop yield has been actively discussed. As for the bio-oil, to be commercially viable, biochar quality and prices should be comparable with the other alternative fuels, such as charcoal, for heat generation.

Yet, for the use of biochar as a soil amendment, in addition to the economic feasibility of biochar production, it is important that the product meets the requirements for certification of biochar although it is possible to pyrolyze all types of organic materials. Listed below are some of the key requirements the European Biochar Certificate sets on the fuel to be able to classify the produced char as biochar.

- Only the organic material is allowed to be used for biochar production. All materials that contain inorganic compounds such as e.g. plastics, rubber, and metal have to be removed from the fuel before pyrolyzing.
- The organic material has to be untreated with e.g. paint and impregnation.
- Maximum Poly-Aromatic Halogen (PAH) concentrations of 12 mg/kg.

- Maximum Poly-Chlorinated Byphenols (PCBs) of 20 ng/kg.
- When using agricultural waste as fuel is important so guarantee that this waste has been cultivated in a sustainable manner.
- Wood chips from forestry must come from forests that are sustainably produced.
- Traceability of the fuel is important.

The amount of heavy metals in the fuel is also regulated, but since the biochar has an ability to bind certain heavy metals the requirements differ greatly.

3. PYROLYSIS AND GASIFICATION OF MUNICIPAL SOLID WASTE

Pyrolysis and Gasification are considered advantageous over MSW Incineration primarily because of their potential to produce useful products, such as syngas, bio-oil, and biochar. However, MSW-based P&G technologies are still in the development stage and the currently available P&G plants for MSW treatment are mostly demonstration facilities.

There are 5 main factors that affect the success of P&G technologies: Technical and operational; Economic; Environmental; Occupational health and safety hazards; and Regulatory. The effective performance in the area of each of these factors guarantees the successful operation of the P&G facilities. Yet, although on the paper P&G facilities are designed to successfully fulfill all the requirements for proper application of P&G technologies, different risks and challenges have been demonstrated for each of these factors. It is important to mention, that simultaneously several challenges and failures might be observed in the same P&G operation, and that often these challenges are interconnected.

For a given feedstock, Economic, and Technical and operational factors are largely dependent on the type of the P&G technology and available investments and are subject to change upon the development of novel, more efficient plant types. Therefore, it is difficult to assess the performance of P&G technologies respective to these factors in general, and individual assessments should be done for each technology operating under certain conditions with a certain type of the feedstock by investors and permitting/licensing organizations. As such, Economic, and Technical and Operational factors will be described briefly.

Yet, several aspects of P&G, such as Environmental, and Occupational health and safety hazard factors and associated challenges and risks are ubiquitous and should serve as a basis for the selection and assessment of the feasibility of P&G regardless of the developmental stage of the technology. These aspects are generally secured by the legislation of the country. Therefore, in the current feasibility study Environmental, Occupational health and safety hazards, and Regulatory factors will be described in detail.

Technical and operational factor	• Successful operation of P&G facilities depends on stable waste composition and qualities, as well as capacity to produce economically viable products. Moreover, the facilities capability to reduce issues that negatively influence the operational status, process stability and environmental impact should be considered in technical and operational performance of the plants.
Economic factor	• The high capital and operating costs , as well as instable revenues from P&G products can make these technologies less attractive compared to other waste management strategies.
Environmental factor	• Strong environmental regulations and their enforcement, including real-time monitoring of emissions from P&G facilities are the mandatory factor for the successful of the P&G applications.
Occupational health and safety hazard factor	• P&G are complex technologies, and Occupational health (e.g. hazards to human health, dangers from toxic gases, etc.) and safety (e.g. explosion hazards, fire hazards, etc.) hazard issues can act as an important barrier for application of these technologies.
Regulatory factor	• P&G rely upon a strong regulatory environment to ensure operational safety and compliance with environmental standards. Due to the environmental and health risks inherent with these technologies, investors should anticipate an evolving, and increasingly stringent future regulatory environment.

3.1. Technical and operational factor

Many currently operating P&G plants only operate effectively with homogeneous feedstocks (i.e. lignocellulosic biomass, coal, and coke) and in small-scale reactors restricted to specific feedstock type, such as tires. In comparison, modern unsorted MSW streams are extremely heterogeneous and thus more technically complex to be treated and managed. MSW streams typically include large proportions of food waste, yard trimmings, plastics, metals, paper, electronics, furniture, household hazardous waste, etc. They can also vary temporally: for example, displaying strong seasonality in moisture content and composition. As a result, commercial-scale P&G plants for mixed MSW never materialized and multiple technical and operational limitations have been described for these operations.

Varying composition and moisture content of mixed MSW presents challenges to P&G technologies.

One of the main challenges is maintaining stable operations, particularly reaction vessel temperatures, which are crucial to successful P&G applications. Over one hundred years of research have shown that even slight changes in temperature and oxygen content can have a significant influence on operational status, process instability and the production of corrosive and toxic by-products in P&G facilities. A major technological challenge in MSW-based P&G is the formation of tar substances, which can potentially lead to blocking, fouling, and corrosion of the plant parts. Of the main technological problems are fire/explosion cases and structural degradation of the systems.

Additionally, as P&G operate above the boiling point of water, high moisture content in MSW dramatically reduces product quality. Many operators find that the energy produced is little more than that demanded to operate the energy-intensive system. This problem is exacerbated in developing countries, where the waste stream is comparatively higher in organics (i.e. food and biomass). This results in a syngas and bio-oil so low in calorific value that it cannot even produce energy, demonstrating the unsuitability of these technologies for large-scale MSW management in developing countries. Even in developed countries, with higher calorific value waste streams, P&G plants are challenged to meet projected energy production targets.

For most types of reactors, the feeding materials must be pre-treated and/or granulated, exerting yet another operational step with inherent risks of failures.

3.2. Economic factor

Research on MSW treating P&G facilities around the globe demonstrates that many facilities have failed due to economic problems, citing inadequate revenues and costs. In general, costs are higher and more uncertain than project proponents foresee, and revenues are lower and more uncertain as well.

There are several costs should be considered in P&G operation, such as capital investment for the plant and equipment, research and development costs for competitive product generation, planning and environmental compliance costs, feedstock and end product transportation costs, feedstock preparation costs, operational costs (repair and maintenance, staff, energy, etc.).

In terms of mixed MSW, the cost of pre-treatment of the feedstock is perhaps one of the major financial challenges. The mixed MSW as delivered to the facility is often unsuitable for P&G due to higher than optimal moisture content, and Lower Calorific Value (LCV) and HHV. Some facilities have disclosed the use of additional conventional fossil fuels, or have added a waste separation process to create a suitable feedstock. Waste granulation adds to the cost of this step as well.

Even in the cases when pre-treatment costs are accounted for, instability of the P&G technologies over time suggests an extra cost. For example, in the EU when the facility does not operate as intended or shuts down for repair, companies with contracts to treat waste must cover the added costs of sending that waste elsewhere.

P&G plants also need to derive income from the bi-products, and the ever-increasing awareness of their quality which raises risks and potential liability for health impacts to the general population and workers, and market competition may play a crucial role.

In order to recoup these costs, financial models often count on charging tipping fees (also called gate fees: these are disposal costs charged to waste generators, e.g., municipalities). Recently, there have been calls to provide additional public financing in more countries through renewable energy incentives and subsidies, such as Feed-In-Tariffs (FITs). The FIT is an electricity production subsidy that has had success in encouraging widespread adoption of renewable energy, most notably solar photovoltaic in Europe. Unlike FITs designed to provide widespread subsidies to homeowners for switching to solar panels, a P&G FIT would benefit only a handful

of commercial operators, and could not expect to enjoy the kind of popularity that a solar photovoltaic FIT does. Advocates of renewable energy programs have joined others in calling for renewable energy policies like FIT to exclude WtE approaches such as P&G. This would leave the operators' balance sheet extremely vulnerable to any change in policy. Even more problematic is that while vendors often tout syngas, bio-oil, and biochar as a "green" or "renewable" energy source, these products created from primarily fossil-fuel derived plastics and other nonrenewable resources are essentially fossil fuel. One example is the recent move by the EU to discourage renewable energy subsidies for waste incineration and require mandatory separation of organics.

The economic feasibility of P&G facilities has to be the main part of the feasibility assessment of a given technology (see Appendix 1). Due to multiple high profile failure cases based on economic feasibility, governments should be extremely cautious in providing financial help/subsidies to the investors (see Chapter 4. International experiences of Pyrolysis and Gasification of Municipal Solid Waste).

3.3. Environmental factor

One of the main objectives of WtE technologies is the reduction of the environmental impact that arises from dumping, open burning or landfilling of the waste. The reduction of waste volume during WtE saves scarce and valuable landfill space and protects the environment from emissions of various gaseous products of waste degradation and pollutant leaching into aquatic and terrestrial environments.

Pyrolysis and Gasification are sometimes labeled as non-pollution technologies in comparison with Incineration. Indeed, Life Cycle Assessment (LCA) of different WtE technologies demonstrates, that the Incineration of MSW has higher environmental burdens than that of P&G in the categories of acidification, eutrophication, global warming potential, human toxicity, and aquatic toxicity. The reduced environmental impact of P&G operations is generally contributed to the incorporation of different emission and pollutant control processes/units in plant configuration and management of final residues, assuming proper functioning of these units. Yet, P&G are shown to have higher potential environmental impacts in the categories of terrestrial eco-toxicity and photochemical oxidation due to emissions of heavy metals to the atmosphere. Interestingly, it was reported that as long as P&G are used on a mixed waste stream or a plastics

waste stream, which includes chlorinated materials and heavy metals, it will result in a similar emissions profile as conventional Incineration.

Generally, many factors affect the environmental impact of P&G, including the type and composition of the waste, technology type, and operational characteristics.

An important issue in the case of P&G of MSW is the variable calorific value, composition and moisture content of the fuel. Another aspect is the variable content of harmful elements and compounds. Industrial wastes are mostly homogenous – containing one type of waste with small variations in its composition. As a result, P&G of mixed MSW generates pollutants in qualities and quantities that are not easily controlled or cannot be easily projected. In contrast, the processing of industrial waste for energy recovery does not require most of the steps followed regarding municipal waste.

The two main sources of pollutant emissions from P&G in terms of feasibility of control are: (1) point source emissions, and (2) fugitive (non-point source emissions). Knowledge of potential pollutant emission sources allows better understanding and organization of P&G pollution control technologies.

Point source emissions are emitted from a single point such as emissions via a stack or vent. Point source emissions are usually the most significant emission source (in terms of annual mass releases) at WtE facilities.

Fugitive (non-point source) emissions are those that are not released from a point source, but rather from an area-based source. Typically fugitive emissions are uncontrolled or are controlled on an as-needed basis, such as through the use of dust suppression techniques in dry conditions. Fugitive emissions are largely minimized by maintaining the WtE facility under negative pressure, using indoor facility air for combustion, etc. Some examples of areas with potential for fugitive emissions and potential mitigation measures are:

- loading and unloading of transport containers,
- storage areas (e.g., bays, stockpiles, etc.) for waste and residual materials,
- transferring material between vessels (e.g., movement of materials to and from silos, transfer of volatile liquids such as select liquid fuels),
- conveyor systems, which are usually enclosed, pipework and ductwork systems (e.g., pumps, valves, flanges),

- abatement equipment by-pass, accidental loss of containment from failed plant and equipment,
- product storage tanks.

The main approaches of regulating and avoiding potential fugitive emissions at P&G facilities are: enclosing these areas and using the air from these locations as sources for combustion air, use of filters, and design and maintenance of the plant and equipment to prevent accidental loses. The control of point source emissions is achieved by the use of specific configurations. The regulation of potential fugitive emissions from a P&G facility is addressed through the approval of the site-specific design and operation plans for the facility. These are included in the issuance of the required permits for the facility operation, including specific terms and conditions that reflect the requirements for design and operation.

Typical discharges from P&G facilities include emissions to the atmosphere, liquid effluent, and solid residues. Generally, environmental impacts are associated with each stage of the P&G application (Table 3.1), and multiple environmental pollutants and health hazards can be detected in each of the operational stages.

Table 3.1. Environmental impacts are associated with each stage of the Pyrolysis and Gasification (A-air, W-water, L-land)

Stages of P&G application	PM	SO_2 and H_2S	NO_x	NH_3	CO and CO_2	POP	Organic and volatile organic compounds	Acid, alkalis and salt	Metals
Feedstock storage, and handling	A						A/W/L		
Reactor operation	A	A	A	A	A	A	A		A
Gas handling and treatment	A	A	A	A	A	A	A		A
Bio-oil and biochar handling and	A/W	A	A			A/W/L	A/W/L	A/W/L	W/L

storage									
Slag/ash handling	A								A/W/L
Wastewater treatment/site drainage	W			W	A		W	W	W
Boiler blowdown				W				W	W
Salt recovery	A						W/L		

Environmental impact of feedstock handling, and transportation

Feedstock handling and transportation of solid biofuels, specifically MSW, is not a major source of environmental pollution, but can have a significant contribution in both emissions of pollutants and human health hazards in the facilities. If very large amounts of biomass are stored in enclosed spaces, the formation of appreciable levels of carbon monoxide (CO) in the storage spaces as a result of slow oxidation/degradation is possible. When dried biomass is mechanically treated or conveyed, dust will be released. Storage of wet feedstock will cause excessive growth of microbial species and microspores emission.

Management of environmental impact of feedstock handling, and storage

Microbial growth and microspore emissions are controlled by storage of only dry biomass (<20% moisture content) and minimizing exposure of the stored material to moisture. In the case of outdoor storage, it is important to utilize fuel or raw material piles according to age; the oldest first (First-in – First-out principle). Storage time of moist biomass should be reduced as much as possible.

Enclosed conveying systems can help to mitigate the release of dust and CO. Good housekeeping (which includes the removal of dust deposits) should be a key to avoid self-ignition of dust layers on hot surfaces and to prevent dust explosions.

Environmental impact of P&G operations

The main environmental impacts of P&G operations are air emissions and liquid discharged.

Air emissions include, but are not limited to PM, sulfur dioxide (SO_2), nitrogen oxides (NO_x), certain volatile organic compounds (VOCs), CO, acid gases, trace metals, POPs, such as dioxins and furans.

The types and quantities of the pollutants produced during P&G facility operations depend on the type of waste, P&G facility operational parameters, etc. As a result of the heterogeneity of mixed MSW compared both with other waste types and in the seasonal context, there is variability in both quantity and quality of pollutants, making their detection and capture a challenging task.

- Atmospheric emissions

Like other combustion processes, P&G facilities can release small quantities of a broad spectrum of compounds into the atmosphere. Modern P&G plants are designed to capture these volatiles for the production of bio-oil and syngas. Only a small fraction of these are considered to be air pollutants and are considered substances of concern. Typical substances of concern that are emitted from WtE facilities and often subject to regulatory limits include:

1. Particulate Matter

Particulate matter (PM) consists of solid and/or liquid particles that are suspended in the air column. PM is typically grouped into the following categories based on their aerodynamic diameter (in micrometers (µm)): Coarse PM, less than 10 µm (PM_{10}), Fine PM, less than 2.5 µm ($PM_{2.5}$) and Ultrafine PM, less than 0.1 µm ($PM_{0.1}$). In human physiology, particles with sizes between 2.5 and 10 µm in diameter are efficiently filtered out by the hair in the nose or by impacting on and adhesion to moist surfaces in the upper respiratory tract. Coarse particles

Management of atmospheric emissions

The emissions of these pollutants are nowadays controlled by end-of-pipe technologies such as electrostatic precipitators, bag filters, and the addition of slaked lime.
The basic method of reducing the formation of dioxins in the gasification process is achieved by the complete conversion of hydrocarbons formed during pyrolysis by operating the process at a high temperature or by using a catalyst.
Modern incinerators are designed to ensure that the length of time flue gas spends in that temperature range is minimized so as to reduce the possibility of de novo synthesis of dioxins/furans and to control and destroy dioxin and furan in the emission before discharge.

fall out of the atmosphere relatively quickly due to gravity and removal by precipitation.

Fine particles (those less than 2.5 μm in diameter) persist in the atmosphere for long periods and travel long distances because they are relatively stable and their size makes them less susceptible to gravitational settling.

2. Products of incomplete combustion

Carbon monoxide and organic compounds and VOCs are the main products of incomplete combustion of the waste. All of these compounds are greenhouse gasses and highly contribute to Global Climate Change. Carbon monoxide is a colorless, odorless gas and is responsible for many cases of non-fatal unintentional CO poisoning (See Chapter 3.4). It is also a flammable gas that is slightly less dense than air.

3. Acidic substances

Acid gases are gaseous contaminants that contribute to the formation of acidic substances in the atmosphere. In combustion, acid gases of concern include SO_2, NO_x, hydrogen chloride (HCl) and hydrogen fluoride (HF).

At high enough concentrations, SO_2 can have negative effects on plants and on animal health, particularly with respect to their respiratory systems. It can also be further oxidized and may combine with water to form the sulfuric acid component of acid rain.

Nitrogen oxides are almost entirely made up of nitric oxide (NO) and nitrogen dioxide (NO_2). Nitrogen dioxide is an orange to reddish gas that is corrosive and irritating. The nitrogen oxides also contribute to the formation of acid rain.

The two elements belonging to the group of halogens most frequently present in MSW are chlorine and fluorine. Both elements at an atomic level cause severe steel corrosion and react with a protective oxide layer on a metal surface. Conditions for P&G hinder the formation of molecular halogen for hydrides, therefore by-products of P&G containing halogens are mainly HCl and HF. The abovementioned compounds have a considerably lesser corrosive effect, however, they should be separated from the gas stream. The content of chlorine in the form of chloride affects the melting point of some inorganic compounds.

Fuel containing in its composition more than 0.5% chlorine is considered as highly slagging.

4. Heavy metals

One of the important aspects of P&G is the emission of heavy metals and toxic elements and the management of products that contain these substances. Non-volatile metals are normally distributed in the slag and ash at the same level of concentration as in the fuel. Metals characterized by partial volatility can be found in the ash and slag, but they also volatilize into the gas phase and therefore are present in gas or post-process aqueous condensate.

P&G typically have a higher contribution to the environmental deterioration than the incineration process due to the heavy metal emissions. A large range of heavy metals such as mercury (Hg), cadmium (Cd), thallium (Tl), lead (Pb), arsenic (As), nickel (Ni), cobalt (Co), chromium (Cr), zinc (Zn) and others, are emitted from P&G facilities during the combustion process due to their increased volatility with increasing temperatures. Heavy metals are also usually carried on particulate matter.

The concern for human and ecological health varies with each metal toxicological profile and its mobility through various environmental pathways. Moreover, the behavior of heavy metals and other harmful elements during gasification and their content in the individual by-products of gasification cannot be entirely predicted by modeling based on thermodynamic assumptions and therefore caution should be exercised to be able to detect all potential emissions during P&G operations. It is important for both global and trans-boundary issues while making decisions for waste facilities in certain technology.

5. Persistent Organic Compounds

The most serious problem in the P&G is the formation of harmful chemicals classified as POPs, particularly polychlorinated furans, polychlorinated dibenzodioxins, polychlorinated biphenyls, and hexachlorobenzene, that all have a high toxicity to living organisms. Reducing the formation of polychlorinated compounds and increasing their capture is particularly important in terms of environmental protection.

It is assumed that the main source of the formation of dioxins in the thermochemical processing of waste is the fraction of plastics. Despite the current increasing trend of good design with the widest possible use of materials prone to recycling, not all of the material used should be gasified. Polyolefine, polystyrene or polyethylene terephthalate waste can be processed without the risk of thermochemical emissions of polychlorinated organic compounds when they provide a uniform flow of waste (e.g. energy recovery in production plants). The halogen content (especially chlorine) makes it difficult for the development of gasification of the plastic fraction of municipal waste (since processed consumer goods waste are often heterogeneous in terms of material and their removal during typical work sorting impossible). Waste containing large amounts of chlorine also includes rubber and processed tanned leather, as well as various animal biomass (e.g. food waste) and sewage sludge.

POPs are emitted from processes that are carried out at a temperature below 1200°C. These compounds are contained in the fuel, formed by the rearrangement of chemical degradation products of chlorinated aromatic hydrocarbons or formed by copper-catalyzed heterogeneous reactions of hydrocarbons occurring in the mixture of exhaust gas and fly ash.

6. Formation of tars

Tar is a mixture of aromatic hydrocarbons with a molecular weight greater than benzene. The amount of tar formation and composition is strongly dependent on the composition of the feedstock directed to the process. MSW compounds that additionally cause an increase in the yield of tars are mainly plastics and biomass waste rich in fats. A relatively high content of tars and its precursors – ethylene and benzene have been demonstrated in the syngas produced during P&G of plastic containing waste.

➢ Liquid discharges

In addition to emissions to air, P&G facilities also generate liquid effluent discharge. Effluent management is more often required for P&G facilities that include wet scrubbers as a component in the advanced process control (APC) train. Facilities that use other alternatives to control acid gases generally are designed as zero effluent discharge facilities, and if they are likely to generate any effluent it would typically include stormwater and/or sanitary wastewater which can easily be managed by conventional stormwater and wastewater control systems.

Management of liquid effluent

Effluent management is more often required for P&G facilities that include wet scrubbers as a component in the APC train, (i.e., facilities with a wet APC train). There are three main alternatives for the treatment or reuse of wastewater from P&G facilities:

- Physical/chemical treatment – based on pH-correction and sedimentation.
- In-line evaporation of process wastewater – by means of a semi-dry system.
- Separate evaporation of wastewater – the evaporated water is condensed, but can be discharged (or reused) without special measures.

The wastewater resulting from wet flue gas treatment contains a wide variety of contaminants including heavy metals, inorganic salts (sulfates) and organic compounds (including dioxins/furans).

Tar represent yet another, but largely underestimated, component of liquid discharges from the P&G facilities. These are generally not controlled and can result in the failures of the operational system (see Chapter 4. International experiences of Pyrolysis and Gasification of Municipal Solid Waste).

Environmental impact of disposal of the remaining output

The solid wastes generated by P&G facilities vary based on the design of the plant, and can consist of: reject wastes (removed prior to feeding the P&G systems), bottom ash, metallic scrap, APC residues, slag (depending on the facility design), filter cake from wastewater treatment, tar, gypsum and loaded activated carbon. These material streams are discussed briefly below.

Typically, handling and disposal of these remaining outputs can have significant environmental impacts and should be considered during both normal operational conditions and plant shutdown.

1. *Reject waste*

The MSW stream commonly includes various materials that should not enter the combustion chamber as they will not efficiently combust due to their size and composition (e.g., metal appliances) or as they could cause damage within the combustion unit (e.g., propane tank). Generally, approximately 2% of the waste received at a P&G will be rejected. Reject waste is generally redirected to alternate disposal and in normal conditions. No strong environmental impacts are associated with reject waste.

2. *Bottom ash*

Bottom ash is the mineral material left after the combustion of the waste. Bottom ash is a heterogeneous mixture of slag, metals, ceramics, glass, unburned organic matter and other noncombustible inorganic materials, and consists mainly of silicates, oxides, and carbonates. Typically, bottom ash makes up approximately 20 – 25% by weight or 5 to 10% by volume of the original waste. There is an environmental impact associated with each of the components of the bottom ash, and therefore it should be managed for the reduction of these impacts.

3. *APC Residues*

Management of remaining output

At most P&G facilities, bottom ash is mechanically collected, cooled and magnetically or electrically screened to recover recyclable metals. The remaining residue is either disposed of at a landfill, or alternatively, it may be used as a construction aggregate substitute. In some cases mineral material left after combustion of waste is generated as slag, but is generally managed in a similar fashion as bottom ash.

Most P&G facilities include equipment to remove ferrous metals from bottom ash. Recovery of non-ferrous metals (primarily aluminum) has also become more common. Separated metallic scrap is either delivered to a scrap dealer or returned to the steel industry.

Generally, APC residues are managed separately from bottom ash as they are often classified as hazardous waste. Common practice for APC residue management is to stabilize or otherwise treat these residues and/or to dispose of them at a hazardous waste facility.

Filter cake from wastewater treatment that is heavily charged with Hg, Zn and Cd must be managed as a hazardous waste and treated or disposed of at secure hazardous waste facilities. For WtE facilities that use activated carbon in their APC train, it has become more common to combust the loaded activated carbon together with waste.

APC residues are the residues resulting from the APC system and other parts of P&G plants where flue gas passes (i.e., superheater, economizer). APC residues are usually a mixture of lime, fly ash and carbon and are normally removed from the emission gases in a fabric filter baghouse.

APC residues contain high levels of soluble salts, particularly chlorides, heavy metals, trace levels of POPs, tar and tar precursors such as ethylene and benzene. The environmental impact of each of these components in terms of their toxicity on aquatic and terrestrial ecosystems is expected. Additionally, the combined effects of these pollutants might have a higher negative environmental impact than the collective effects of each single pollutant. Typically, APC residues make up approximately 2–4% by weight of the original waste.

Environmental impact of P&G products

Environmental impacts associated with P&G products are expected to be generated during leakages and spills of the bio-oil, and accidental release or application of biochar to soils and aquatic environments.

Bio-oil contains a wide verity of different hydrocarbons and during the spillage can be harmful for both terrestrial and aquatic flora and fauna. The use of biochar as a soil amendment indirectly suggests no negative environmental impact. Pollution of aquatic environment biochar can affect turbidity of the water body, and as in the case of PM, aquatic animal physiology. In case of hazardous waste treatment, during which biochar accumulates many hazardous materials, its application can be harmful for terrestrial and aquatic flora and fauna.

3.4. Occupational health and safety risks of Pyrolysis and Gasification technologies

As with any complex technology, the operation of P&G plants may potentially cause a wide number of Occupational health and safety hazards (HSHs), unless adequate and effective preventive measures are emphasized continuously during the operation of the plants. Typical HSHs from P&G facilities include fire, gas explosions, dust, injuries from mechanical process, gas poisoning, and skin burns, and negative effects of noise and odor pollution. These potential risks act as an important barrier to the G&P technology implementation.

Therefore, the cornerstone of the successful operation of P&G technologies should be the risk assessment and safety appraisal. Pyrolysis and Gasification facilities should be designed, constructed, and operated according to international standards for the prevention and control of HSHs. A broadly accepted Health and Safety Guideline should effectively tackle the potential risks and significantly contribute to the development of a safe and risk-free technology.

This is of importance not just for loss prevention in the process industry, but for the general public that live in close proximity to the proposed site.

As with any chemical plant risk assessment, the P&G site should be divided into functional units to achieve the highest standards of process integrity. But, the HSH risks in a Pyrolysis or Gasification systems require far more depth, as these systems depend not only on the design of the reactor, along with how it is operated, but also to a great extent on the consistency and the heterogeneity of the feedstock. Due to this interdependence, a holistic approach to prevention and control of HSHs in P&G facilities is essential.

Generally, in different functional units of P&G facilities specific hazards may occur. Yet, the same hazard can be typical for multiple process steps, and multiple hazards can be associated with the same process step. Table 3.2 describes the potential HSHs associated with different stages of P&G technology. Accordingly, different mitigation measures should be applied to each stage of P&G technology.

Table 3.2. Potential Occupational health and safety hazards associated with different stages of Pyrolysis and Gasification

Risk	Feedstock preparation	Feeding system	Reactor	Gas cleaning and utilization	Biochar handling and utilization	Bio-oil handling and utilization
Fire	+	+	+	+	+	+
Dust	+	+	+		+	-
Mechanical hazard	+	+	+	+	-	-

Toxicity/poisoning	-	+	+	+	+	+
Skin burns	-	-	+	+	-	-
Explosion	-	-	+	+	-	-
Structural integrity issues	-	-	+	+	+	+
Noise and odor	+	+	+	+	-	+

Fire, explosions and structural integrity aspects

Fire, explosions and structural integrity aspects are interrelated HSHs and their risks can be detected in several stages of P&G operation. The main cause of the fire in the feedstock preparation stage is self-heating and self-ignition of large piles, where biomass is stored. Higher chances of fire are anticipated during the P&G operation stage. Producer gas generally contains hydrogen (H_2) and CO both at concentrations of approximately 20% by volume. There is a risk of fire and explosion caused by both overpressure and underpressure in the system, resulting in internal or external explosions by both ingress of oxygen or egress of producer gas. Specifically worrisome is that the Pyrolysis process is highly sensitive to the presence of air. Accidental incursions of air can result in process upsets and increase the risk of explosive reactions.

The greatest risk of fire, explosion, and toxic release comes when the system is starting up and shutting down, or operating intermittently, a condition that can occur when feedstock amounts are not well calculated.

Fire, explosions and structural integrity issues are also expected P&G product storage and handling. Syngas storage and transportation can be affected by gas leakages that in turn can cause fires and explosions.

Although the main issues associated with the storage and transportation of bio-oil and biochar are the environmental issues due to leakage and contamination of the environment, a fire hazard can be expected under these conditions as well.

Other than being caused by fire and explosion, structural integrity issues can arise from process-line contaminants. Syngas contains varying quantities of tars and char particulates. These process-line contaminants adhere to or condense upon all post-reactor surfaces due to their complex nature and wide range of dew points, impairing the integrity of downstream components.

The feedstock composition has a direct impact on P&G technology instability, and hence there are greater challenges with the use of mixed MSW. This is particularly problematic for process safety appraisal because there is currently no official standard for characterizing P&G feedstock.

Using MSW as an energy feedstock creates greater process challenges that are not present with fossil or biomass

Mitigation of fire, explosions and structural integrity risks

Maintaining dry storage conditions and minimization of inventory levels to give relatively short storage times, and consideration of the size/area of storage, occupancy and escape routes, active fire systems, detection of hot spots, monitoring of carbon monoxide levels can be taken in into account for the mitigation of these hazards.

Total system integrity with respect to gas tightness has to be a key safety feature.

All plant and equipment and electrical installations should be maintained in good working conditions and subject to routine inspection and maintenance. An Accident Management Plan should be implemented to manage foreseeable risks from the installation. Management System should include procedures and actions required in the event of fire or spillage to control and minimize their spread. Firefighting equipment should be maintained on site in accordance with fire regulations. Good housekeeping measures should be employed across the site. Any fire on site should be treated as an emergency. All P&G facility staff should be fully trained in the fire procedure and the use of firefighting equipment. Any incidents of fire should be reported to the Local Authority and records kept. Any abnormal conditions should trigger automatic shutdown procedures and appropriate controls to prevent the build-up of an explosive atmosphere.

All the P&G products should be stored within secure units and should be provided with secondary containment. Regular inspections of containment should be done to identify leaks. A spill cleanup procedure should be in place to minimize the impact from spills and leaks. Fire hazard prevention measures should be taken.

fuels. Dioxin and acid gas production, and the high and variable moisture content in MSW leads to unforeseen corrosion, attrition and downstream fouling problems.

Dust pollution

Dust, e.g. inorganic particles and microbial spores, are generated during feedstock preparation, storage and handling; feeding and fly ash removal by particulate collection equipment, and handling of biochar and process residues.

Health issues related to any of the components of bottom ash and slag can be expected during the handling and disposal of these residues.

Dust generation creates several problems such as:

- Airborne or entrained dust forms explosive mixtures with air in which a primary explosion can render the dust airborne causing secondary explosions which can be devastating.
- Dust inhalation is a potential source of lung damage.
- Eye and skin irritation may occur.
- Layers of combustible dust could cause smells, or smolder and ignite.
- Dust settlement on all exposed horizontal surfaces lead to safety problems for personnel in routine operations, as well as increased maintenance and aesthetic detraction.
- Increased friction and wear of mechanical equipment caused by dust deposition increases costs and reduces reliability, which in turn increases the potential of accidents.
- Health issues if the dust contains hazardous materials of spores.

Mitigation of dust pollution

- Minimization of solids handling and avoidance of rough handling to minimize attrition of particles and suspension of dust;
- Complete enclosure of all solids handling, particularly conveying equipment at the discharge points;
- Installation of suction hoods and gas cleaning equipment to control dust sources, for example mills and screens;
- Maintenance of an under-pressure in enclosed environments to prevent the spreading of dust into adjacent premises by use of a suitable gas cleaning equipment.
- Proper handling and removal practices of process residues and products.

Toxicity and poisoning

The main cause of gas poisoning in P&G facilities is CO. Carbon monoxide can be produced both during the feedstock handling and P&G process. In terms of toxicity, concentrations of CO above 0.16% in air cause death in 2 h, and with just 1.28% death can occur within 1–3 min. Consequently, there is also more than enough CO in producer gas to cause fatality at extremely short levels of exposure should a leak occur.

Additional compounds of concern are multiple gaseous emissions from P&G facilities including dioxins, acidic gasses, etc. The gaseous compounds can affect not only the facility workers but also the general public around it.

Mitigation of poisoning, mechanical injuries and burns

A broadly accepted Health and Safety guideline should be used for the P&G operation. The facility works should be trained in accordance too the guideline to avoid injuries and burns.

Total system integrity with respect to gas tightness has to be a key safety feature for the facility workers.

Monitoring of carbon monoxide levels should be done continuously to detect possible leaks.

Any abnormal conditions should trigger automatic shutdown procedures and appropriate controls to prevent the build-up of a toxic atmosphere.

To safeguard general population from potential HSHs, the location of P&G facilities should be carefully selected.

Health issues related to any of the components of bottom ash and slag can be expected during the handling and disposal of these residues (for mitigation measures see Mitigation of fire, explosions, and structural integrity risks).

Injuries from mechanical hazards

Generally mixed MSW as delivered to the facility is often unsuitable for P&G and waste separation and/or granulation are necessary steps to make MSW suitable feedstock for P&G Facility. Most of the time either hand sorting and/or application of technological means are used for this purpose, and therefore, there is a potential for mechanical hazards and injuries at this stage of operation.

Skin burns

Some of the surfaces of the P&G plants, such as the cyclones, the gas lines, the engine and its exhaust may get hot during operation and thus cause skin burns if touched. For permanent stationary installations, such surfaces should be insulated to protect the operators and also to reduce heat losses.

Noise and odor pollution

Noise and odor pollution are yet other aspects of the P&G operation. Noise pollution is generally connected with several stages of facility operation such as:

- Reception, storage and handling equipment
- Fuel preparation
- The feeding system
- The compressors
- The gas turbine or engine.

The effects on humans of prolonged exposure to noise are well documented. Limits on sound levels, under certain conditions in the industry, are generally established by the Occupational Safety and Health acts.

Mitigation of noise and odor pollution

- Adequate measures must be taken to minimize noise, for example by use of sound absorbent materials between supports and acoustic enclosure. Wherever possible, fans and other mechanical equipment with lower "sound pressure" should be used. Operators are also required to be provided with ear protection plugs.
- Odor control is of utmost interest if P&G facilities are located near inhabited areas. Depending on the source, different specified technologies and approaches might be implemented to minimize the odor nuisance in and near P&G facilities. In addition, odors will be produced during storage and transportation of all of P&G products, and a leak-free confinement should be used for these purposes.

Odors may arise because of:

- The degradation of organic matter;
- The occurrence of even minute gas leaks;
- The handling and storage of tar, wastewater, fly ash and other products and bi-products.

In fact, one of the main obstacles in the use of bi-oil in different industries is the foul distinctive smell.

There are two main aspects associated with odor pollution. Unpleasant odors can significantly affect the comfort level of the P&G facility workers and the population living nearby. Moreover, most of the time strong, unpleasant odor is associated with volatile chemical compounds that might be harmful to humans, thus serving as a biological signal to prevent poisoning/toxicity. As such, odor pollution should be monitored and preventive measures should be organized.

Although many potential occupational HSHs are possible in P&G applications, these hazards differ in their likelihood and severity. Qualitative risk analysis of health and safety hazards in P&G technologies is presented in Table 2.5.

Table 3.3. Likelihood and severity of Occupational health and safety hazards

Hazard	Likelihood	Severity
Fire	Medium	High
Explosion	Low	High
Structural integrity issues	Low	Medium
Dust pollution	Medium	Low
Poisoning/toxicity	Low	High
Mechanical injuries	Low	Low
Skin burns	Low	Low
Noise	High	Medium
Odor	High	Low

3.5. Regulatory aspects

Waste management in general and P&G technologies in particular need to be covered by a legal regulatory framework that is effectively implemented and enforced. In addition to the legal anchorage, regular control by qualified and well-equipped public authorities is of utmost importance to enforce regulations.

According to the Comprehensive and Enhanced Partnership Agreement (CEPA) between EU and Armenia (24 November 2017), Armenia has undertaken an obligation to approximate its legislation in the relevant sectors with that of the European Union legislation. As such, only the European regulatory framework for P&G technologies will be discussed here.

The waste hierarchy is the cornerstone of EU policy and legislation on waste and a key to the transition to the Circular Economy (CE). Its primary purpose is to establish an order of priority that minimizes adverse environmental effects and optimizes resource efficiency in waste prevention and management (Article 4 of Directive 2008/98/EC of the European Parliament and of the Council on waste and repealing certain Directives, OJ L 312, 22.11.2008).

Environmental framework legislation and a national waste act should determine the objectives and fundamental rules of WtE activities for MSW including emission control principles. In particular, they should contain:

- *Planning and tendering:* In general, the national standards are considered when planning new infrastructure. However, when looking at P&G options, it is recommended to apply internationally recognized emission and safety standards for any tendering process to minimize risks for decision-makers.
- *Obligations of operators:* The legislation should require that P&G installations are subject to an environmental impact assessment and permitting under the national emission control and/or waste law.
- *Prerequisites for permitting:* In general terms, the act should provide the obligations of plant operators to ensure that no harmful effects on the environment or other hazards, significant disadvantages and significant nuisances to the general public, the staff and the neighborhood may be caused by such installation or the surrounding premises.
- *Safety and environmental standards:* The emission thresholds and safety requirements have to be controlled on the basis of legally binding standards. Emission limit values imposed on P&G should comply with internationally recognized and applied standards. The application of low and inadequate environmental standards will lead to additional hazards to public health, and environmental costs.

- *Monitoring of the compliance with safety and environmental standards:* Monitoring is the core responsibility of a competent and independent regulating authority. National laws should lay down environmental standards and ensure compliance near P&G installations.

In the territory of EU planning, building, commissioning, and operation of P&G plants are activities that are subject to European and national regulations. In order to determine the relevant legal framework for P&G plants, it is useful to draw a rough distinction between those requirements applying to the design and manufacturing of P&G plants (as products that are to be placed on the European market) and those applying for ownership and operation; in simple terms, to distinguish between the manufacturer's and the operator's duties.

The underlying legal background is different for the two parties. While the legal framework with regard to the safety of products placed on the market is rather homogeneous throughout Europe, the legal framework for plant operation displays many variations across the EU member states.

The focus is on legal requirements towards health, safety, and environment (HSE). Hazard identification and risk assessment are among those legal HSE requirements that have to be met both by the manufacturer and the operator.

Manufacturing and placing on the market

The manufacturer's HSE duties related to P&G plants arise from European directives according to Article 95 of the EC Treaty, which define essential health and safety requirements that have to be fulfilled by-products intended for the European market. The main directives currently in force are:

- 73/23/EEC: Low voltage equipment [2006/95/EC] - Electrical instruments, drives, control systems, generators
- 89/336/EEC: Electromagnetic compatibility [2004/108/EC] -Electrical instruments, drives, control systems
- 98/37/EC: Machinery [2006/42/EC] -Drives, pumps, blowers, moving mechanisms, parts, gas engine, fuel feeding system, ash removal system
- 94/9/EC: Equipment for use in potentially explosive atmospheres (ATEX directive) - Blowers, measuring devices, flame arrestors
- 97/23/EC: Pressure equipment: heat exchangers/boilers, compressed air system
- 2000/14/EC: Noise pollution by outdoor equipment

Common elements of these directives include the assessment of conformity with the essential health and safety requirements set out in the directives. Technical specifications of products meeting the essential requirements are laid down in harmonized standards. The application of harmonized or other standards remains voluntary, and the manufacturer may always apply other technical specifications to meet the requirements. Pyrolysis and Gasification plants are supposed to be professional equipment, operating on a commercial scale.

Construction and operation of P&G plants

Construction and commercial operation of P&G plants are affected by various regulations that may have a direct impact on the design of the plant and its operation mode.

The areas that appear to be the most important in terms of environmental protection and occupational safety and health regulations are:

- *Environmental impact, including*:
  - Permit requirements (integrated pollution prevention and control, waste production and treatment, handling of substances hazardous to water/protection of water bodies)
  - Environmental impact assessment (EIA)
  - Noise pollution
  - Major accident hazards
  - Soil protection
- *Occupational safety and health, including:*
  - Health and safety at work, general
  - Substances hazardous to health
  - Fire and explosion hazards, explosion protection
  - Pressure equipment
  - Installations for monitoring, electrical equipment, machinery.
- *Other Regulations:*
  - Renewable energies and biomass
  - Energy feed-in, land use planning
  - Safety of buildings.

The regulations pertaining to the subjects of these areas need to be determined individually for P&G installations.

Permit application

Typically, the application for a permit to construct and operate P&G plants will have to include the items listed below:

- information on the applicant (name, address),
- specific reference to the relevant regulations, e.g. classification of the installation
- and of the type of industrial activity according to national schedules,
- description of the plant location, supplemented with maps and site plans in
- different scales,
- description of plant layout and plant operation (text, flowsheets, equipment lists,
- layout plans),
- mass and energy balances of the entire plant (feedstock, emissions, waste,
- auxiliary materials, energies that are used and delivered), demonstrating that all
- emission streams have been considered,
- description of general occupational safety measures,
- description of special hazards (fire, explosion, hazardous substances) and
- precautionary measures,
- description and assessment of potential effects on the environment (e.g. noise
- emissions, emissions to atmosphere),
- description of waste and wastewater management.

Occasionally, additional third-party certificates and expert opinions may be required, e.g. on noise emissions and on fire and explosion protection.

Some regulations that apply for P&G installation and operation are:

- Council Directive 96/61/EC of 24 September 1996 concerning integrated pollution prevention and control (the 'IPPC Directive') lays down measures designed to prevent or, where that is not practicable, reduce emissions in the air, water and land from certain industrial activities to achieve a high level of protection of the environment as a whole.
- The situation of licensing (permit) requirements for P&G plants results from national or regional legislation transposing the IPPC Directive and defining integrated permit

procedures. In some European states, Annex 1 of the European IPPC Directive (categories of industrial activities) has been transposed into national law on a 1:1 basis, which means that P&G are not in the scope of these national regulations. Other European states have combined the obligations from the IPPC Directive with their national schedules for plants and activities subject to licensing. Even if a P&G is not in the scope of national regulations transposing the IPPC Directive, individual permits for construction and operation (e.g. building permits) or notification of regulatory authorities may still be required due to other national or regional regulations.

If a permit is required for the construction and operation of a P&G plant, the applicant has to provide detailed information on the planned activity. The procedures are country-specific.

Production, storage, and transportation of P&G products

As relatively new applications in the market, with the capacity of treating different types of waste with differing compositions and mixture contents, legislation related to the P&G products, including their storage and transportation, is still in a developmental stage. The existing regulations do not cover all potential products, and new information arising on the quality of these products after their introduction to the market often initiates either development of new standards or re-evaluation of the existing ones.

- Standards applicable to bio-oil

Currently, only standards on fast pyrolysis bio-oil (FPBO) exist. Fast pyrolysis bio-oil is registered with Chemical Abstracts Service as CAS No.1207435-39-9, qualifying it as a chemical. As such the supplier must provide information about the hazards that the chemical presents.

European standards exist for fuel oil boilers (such as EN 15034:2006 Heating boilers - Condensing heating boilers for fuel oil) but these apply not directly to FPBO fired boilers.

The Draft CEN prEN 16900 standard "Fast pyrolysis bio-oils for industrial boilers – requirements and test methods" describes two grades of FPBO. Grade B contains lower amounts of sulfur, solids, and ash than grade A.

- Standards applicable to biochar

National and supranational legislation in the EU is not yet adequately prepared to regulate both the production and the application of biochar. Driven by this "regulatory gap", voluntary biochar quality standards have been formed in Europe with the European Biochar Certificate, in the UK with the Biochar Quality Mandate and in the USA with the International Biochar Initiative (IBI) Standard which is intended to be used internationally. In parallel to this, biochar producers and biochar users in a number of EU countries were partly successful in fitting the new biochar product into the existing national legislation for fertilizers, soil improvers, and composts.

According to the Position of the European Parliament adopted at first reading on 27 March 2019 with a view to the adoption of Regulation (EU) 2019/… of the European Parliament and of the Council laying down rules on the making available on the market of EU fertilizing products and amending Regulations (EC) No 1069/2009 and (EC) No 1107/2009 and repealing Regulation (EC) No 2003/2003: "For certain recovered wastes, such as struvite, biochar and ash-based products, within the meaning of Directive 2008/98/EC of the European Parliament and of the Council (8), a market demand for their use as fertilizing products has been identified. Furthermore, certain requirements are necessary for the waste used as input in the recovery operation and for the treatment processes and techniques, as well as for fertilizing products resulting from the recovery operation, in order to ensure that the use of those fertilizing products does not lead to overall adverse environmental or human health impacts. For EU fertilizing products, those requirements should be laid down in this Regulation. Therefore, as of the moment of compliance with all the requirements of this Regulation, such products should cease to be regarded as waste within the meaning of Directive 2008/98/EC, and it should, therefore, be possible for fertilizing products containing or consisting of such recovered waste materials to access the internal market. To ensure legal certainty, take advantage of technical developments, and further stimulate the incentive among producers to make more use of valuable waste streams, the scientific analyses and the setting of recovery requirements at Union level for such products should start immediately after the entry into force of this Regulation. Accordingly, the power to adopt acts in accordance with Article 290 TFEU should be delegated to the Commission in respect of defining, without unnecessary delay, larger or additional categories of component materials eligible for use in the production of EU fertilizing products." Thus, there is an intense discussion on the matter; however, biochar is not legally recognized as a fertilizer yet.

Enforcement and standards of environmental regulations

In regard to P&G facilities, the majority of jurisdictions use a regulatory approach that combines some facets of the regulatory environment associated with P&G facilities, such as same stack emissions limits, Ambient Air Quality Objectives requirements, but also tailor these approaches in a more industry-specific fashion. Treatment facility size and used temperatures and retention times dictate the environmental regulation for the specific Pyrolysis or Gasification plant.

Typically, the enforcement of the regulation is undertaken by the environmental protection agencies or equivalent organizations through the environmental permitting regimes, which provide the mechanism by which all major industrial processes are permitted and regulated, with respect to their environmental performance.

The potential for fugitive emissions from WtE facilities is required to be addressed through site-specific design considerations.

Emissions of many parameters need to be monitored continuously. This enables process operators to comply with the emissions limits set out in operating permits. Some substances, including dioxins, furans, and some metals, cannot be measured continuously or it may be prohibitively expensive to do so. Some substances such as dioxins and furans can be continuously sampled, with analysis carried out periodically to give the average amount emitted over a longer period. Emissions of substances that cannot be measured continuously are normally measured periodically under the terms of the operating permit. Routine day-to-day control is achieved by ensuring that surrogate indicators such as combustion temperature, particulate emissions, and hydrogen chloride emissions are within the permitted limits.

It is common for emission limits to be linked to monitoring techniques and corresponding averaging periods. Typically, one-half hour average limits are specified for parameters measured by continuous monitors, whereas daily average limits are specified for parameters measured by periodic monitoring. For some parameters, limits for both continuous and for periodic monitoring are specified. The industry trend is towards increased use of continuous monitoring devices where they can be correlated as equivalent to periodic monitoring techniques. The limits also allow for periodic monitoring for parameters that require stack testing.

In terms of the use of non-typical feedstocks, such as mixed MSW and/or hazardous waste, revised emission criteria are advised for parameters that are directly associated with fuel quality, such as heavy metals and POPs. The facilities should still meet their permitted emission

parameters that are established based on the primary purpose and design of the facility, such as SO_2, CO, and NO_x. This approach is protective by requiring compliance with the appropriate, more stringent, limits for potentially harmful contaminants related to the substituted fuel. Development and application of feedstock, specifically mixed MSW quality standards and specifications, specific to parameters that cannot be reasonably managed in the proposed industrial application (e.g., avoidance of fuels with high Poly-Vinyl Chloride (PVC) content if the control of acid gases is unfeasible). This would include development of a definition for various fractions of MSW. Potential effluent discharges from a P&G facility originating from process wastewater (associated wet flue gas treatment), originating from bottom ash storage, or from other process wastewater streams (boiler feed water, sanitary wastewater, stormwater (either contaminated or clean) or used cooling water should be authorized as part of the Solid and Liquid Waste Management Plan or under a waste discharge permit with limits determined on a site-specific basis.

Testing the leachability of the process residues should be critical in the decision process for reuse and /or disposal of these residues.

4. INTERNATIONAL EXPERIENCES OF PYROLYSIS AND GASIFICATION FOR MUNICIPAL SOLID WASTE

Pyrolysis and Gasification of different feedstocks have been practiced on the commercial-scale for several decades. Yet, P&G technology application to treat MSW is a relatively new approach. Many countries faced with a chronic MSW management problem over the last decade have attempted to implement commercial P&G of MSW with various avenues of financial subsidies. This has stimulated entrepreneurial investment and unprecedented level of environmental and planning permit applications to build and operate P&G plants in multiple countries such as UK, Germany, Denmark, Australia, Sweden, New Zealand, and Canada. This is despite a track record of almost ubiquitous failure of P&G applications worldwide. However, one country, Japan, has persevered more than any other with commercial MSW Gasification in the last two decades.

> "Waste is not a homogenous fuel. It has so far turned out to be too heterogeneous to be able to treat in a Gasification or Pyrolysis process, irrespective of how you pre-treat the waste. It is absolutely not applicable for mixed MSW with today's technology. Another very negative factor is that the energy balance very often has turned out to be negative."
>
> Hakan Rylander, former President of International Solid Waste Association (ISWA) and CEO of the South Scania Waste Company (Sweden)

Gasification has a long track record with which to test vendor claims about the technology's suitability for waste treatment. Unfortunately, Gasification plants have made very little operational data available. Project proponents routinely use projected or target data, but the short operational history of most facilities and the lack of ongoing monitoring make it impossible to conduct post-hoc verification of these targets or even basic mass and energy balance calculations. Several independent consulting groups that have evaluated Plasma Arc Gasification proposed for MSW treatment have recommended against this technology, mainly on economic grounds[6]. A 2008 USA study for a government agency surveyed a large range of Gasification and Plasma technologies and found these processes are unproven on a commercial scale for

[6] GAIA, 2017. Waste Gasification & Pyrolysis: High Risk, Low Yield Processes for Waste Management.

treating MSW. It also found that solid and liquid residuals may be hazardous, and furthermore, that the technologies require pre-treatment of waste and are more expensive than conventional Incineration or Landfilling[7].

Compared to Gasification processes, fewer facilities have attempted to use Pyrolysis at a similar scale. Similar to Gasification, little operational data is available. Authors of a recent technology review of the economic viability of Pyrolysis processes, in general, concluded that large scale Pyrolysis processes still faced daunting problems, not the least of which was the refining of the various Pyrolysis bio-oils for commercial use[8].

Despite several successful applications of P&G for specific high calorific homogenous waste streams have been developed worldwide, decades of attempts to apply P&G to MSW have exposed the underlying complications with this approach, as evidenced by the high failure rate of these plants and high environmental and health hazard issues. Existing data do show that dozens of projects have failed, for a variety of technical and financial reasons, as discussed below.

> "There is no reliable technology readily available. High costs for technical development, repair and maintenance make it unprofitable. Dangerous threats exist to the environment and health due to carcinogenic waste."
>
> German Development Agency GTZ (currently GIZ), 2010.

Moreover, some lists of such facilities may give the impression that more facilities are in operation than the reality. Lists do not always distinguish between facilities that accept MSW, other waste streams like tires and auto shredder materials, facilities that combine various fossil fuels with different waste streams, or ash vitrification facilities, nor facilities that have been shut down.

The P&G plant failures highlight a widespread inability to meet projected energy generation, revenue generation, and emissions targets, or to simply maintain consistent operation. The primary lessons to be drawn are that the benefits of MSW-based P&G are smaller and more uncertain, and the risks much higher, than technology proponents claim.

---

[7]Foth Infrastructure& Environment, LLC, 2008. Updated Research Study Gasification, Plasma Ethanol and Anaerobic Digestion Waste Processing Technologies.
[8]EnviroPower, 2013. A Comparative Assessment of Commercial Technologiesfor Conversion of Solid Waste to Energy

Due to numerous high profile failures, many countries (such as Germany, UK, Australia, USA), and companies have now abandoned the concept of commercial MSW-based P&G.

4.1. Notable cases of Pyrolysis and Gasification failures

Commercial-scale application of P&G to treat MSW has met multiple challenges that have resulted in the failure of these operations. Economic, technological and environmental issues have been found to be responsible for these failures. Major cases of failures of P&G facilities are presented in Table 4.1.

Economic failures

The high capital costs and high energy consumption of P&G make them financially unattractive compared to other waste management strategies, including recycling, composting, and Landfilling.

Many P&G projects have failed because of financial non-viability. Some of the notable examples are:

- The 2016 cancellation of two Tees Valley, UK Gasification projects which lost USA-based company Air Products between US$900 million and $1 billion.
- The Thermoselect Gasification facility in Karlsruhe, Germany lost over $500 million in 5 years of operations.
- In the UK, Interserve left the "energy-from-waste" field after losing £70 million on Gasification projects.

Many other companies have gone bankrupt attempting to construct Gasification or Pyrolysis processes, including Energos, BCB Environmental, Waste2Energy, Biossence, Compact Power, and New Earth Solutions Group (Table 4.1).

➢ Technological problems and related HSHs

Technology and operational processes have been suggested to have a strong impact on the economic feasibility of P&G. However, even in the cases when proper and successful technological performance is anticipated and planned during project implementation, a gap

between potential and actual performance of these technologies has been accounted for HSH cases in P&G facilities.

For example, the fire hazard, and explosion, caused by the ignition of a mixture of gas and air in flammable proportions, getting ignited in a burner at unwanted times are serious issues related to the P&G. The production of acid gasses and related corrosion of plant parts, as well as the formation of tar and blockage of system parts add to the potential causes of fire and explosion in P&G facilities.

Due to numerous high profile technological and operational failures, Germany has now abandoned the concept of commercial MSW Gasification. Two systems are of note: in 1992 the Thermoselect technology was operated as a pilot plant in Fondotoce (Italy), followed in 1999 by two industrial-size plants in Karlsruhe (Germany) and Chiba (Japan). The plants in Karlsruhe and Fondotoce shutdown followed by a stoppage in construction of a further plant in Ansbach (Germany) in 2002 and the cancellation of projects in Hanau and Herten (Germany) and Giubasco (Switzerland). It was reported that the Karlsruhe facility was forced to close because of multiple simultaneously occurring and interconnected issues, including operational problems such as an explosion, cracks of the high-temperature chamber's concrete due to corrosion and heat. Other reports state that the regional government admitted that the walls of the chamber were so battered that pieces had fallen off and could have caused an explosion.

Another infamous failure was the RWE-ConTherm plant in Hamm which closed in 2009 due to a chimney collapse, which was found to be due to corrosion. It was identified as being caused by the feeding material not matching the process and creating internal temperatures beyond tolerable process limits.

In August 2013 a fire ultimately caused the permanent closure of the MSW Gasification plant at Dumfries, Scotland.

Identical issues have been observed even in the cases where P&G facilities were an integral part of the power plant. An example of such combination is the power plant in Hamm-Uentrop, which in August 1998 hired VEW Energie (Dortmund) and “Annesmann Demag Energie und Umwelttechnick” to build a Pyrolysis plant as an integral part of the power plant. From early summer 2000 and until the year of the damaging event (end of 2009), 100,000 tons of high calorific residues were pyrolyzed. The gas and coke were used in the power plant to generate

electricity, replacing up to 10% of coal. However, a number of technical difficulties appeared in practical operation, which culminated in a major incident in late 2009, of which the main cause could have been the corrosion.

Environmental failures

Perhaps some of the most important failure cases in P&G technology for MSW have been related to the failures to correspond to the environmental standard and hazard issues, in spite of the existence of technological measures to overcome these issues.

Over the course of the application of P&G for MSW, many cases of breaches in gas emissions and pollution cases by liquid discharges are reported.

The Dumfries fire in 2013 followed initially 16 months of problems when the site was shutdown because of 38 by-pass stack activations, over 200 reported emission limit breaches, two dioxin emission breaches, ca. 100 notifications of short term exceedances; and then after re-opening 12 months later, a further 50 bypass stack activations, 3 low temperature, 23 low O_2, 6 dioxin failures, 2 exceedances of the daily HCl limit, 1 exceedance of the daily NO_x limit, 2 failures to meet the heavy metals limit, 1 complaint of flies, and 2 incidents of dark smoke emissions from the bypass stacks.

In the abovementioned Thermoselect case, multiple occasions of the releases of toxic gases were reported and served as a basis for shutting down the Karlsruhe facility. Additionally, cyanide-contaminated wastewater was released into the environment.

Many P&G systems utilize water capture techniques for tar control, and these must have wastewater disposal standards. In recent years, during its period of operation in 2003, the Karlsruhe Thermoselect plant allegedly disposed of 120,000 m^3 of wastewater into the Rhine; and with the Fenebrache plant, it is alleged that the Thermoselect officers contaminated a lake with polluted wastewater.

Similar issues have been observed even in the cases when well know homogenous waste streams are used, suggesting the widespread nature of failure in P&G facilities and a need to carefully assess their feasibility for waste treatment in terms of compliance with environmental standards.

As an example, in July 2009, a tire Pyrolysis facility for the production of bio-oil started operations in Barangay Pulong Yantok (Philippines). The facility was located near the boundary between Pulong Yantok and Barangay Encanto. Soon after these operations started, people living nearby were bothered by the foul odor of emissions from the facility, which caused a variety of illnesses. The earliest symptoms reported by residents were difficulty in breathing, clogged nose, coughing, chest pain, and eye irritation. Other symptoms, including fatigue and a general feeling of weakness, were recognized later when those afflicted felt relief during brief periods of non-operation of the facility. Observers also noted signs of environmental pollution: black soot from the facility covered roofs, leaves and other surfaces; oily contamination on the ground and surface water; and sacks of Pyrolysis char were dumped in inappropriate places close to the facility. People who collected rainwater for drinking could no longer use it because it was contaminated with soot.

Table 4.1. Major cases of failures of Pyrolysis and Gasification facilities (T-technological; E-environmental; F-financial)

Location/ operating company	Failures	Year of closure	Reference
Oldbury (UK)/Innovative Environmental Solutions	T-fire, death of a person	2017	1. Rollinson, 2018[9]
Karlsruhe (Germany)/ Thermoselect	T- explosion cracks due to corrosion and heat E-cyanide-contaminated wastewater, toxic gases F-$500 million	2002	1. GAIA, 2017 2. Rollinson, 2018

[9] Rollinson A., 2018. Journal of Loss Prevention in the Process Industries 54: 273–280.

Hamm-Uentrop (Germany)/ VEW Energie (Dortmund) and "Annesmann Demag Energie und Umwelttechnick	T-chimney collapse due to corrosion	2009	1. Chen et al., 2014[10] 2. Rollinson, 2018
Dumfries (Scotland)/ Waste2Energy	T-fire, E-multiple F- £600,000	2013	1. Holder, 2013[11] 2. Rollinson, 2018 3. McIntyre, 2013[12]
Tees Valley (UK)/ Air Products	F- US$900 million - $1 billion	2016	1. GAIA, 2017[13] 2. Rollinson, 2018
Glasgow (UK)/ Interserve	F- £70 million	2016	1. GAIA, 2017 2. Rollinson, 2018
Glasgow, Milton Keynes, Derby and on the Isle of Wight (UK)/Energos	F-Not specified	2016	1. GAIA, 2017 2. Rollinson, 2018
Tockwith (UK)/BCB Environmental	F-Not specified	2010	1. GAIA, 2017 2. Rollinson, 2018
London (UK)/ Biossence	F-Not specified	2014	1. GAIA, 2017 2. Rollinson, 2018
Avonmouth (UK)/Compact Power	F- £20 million	2011	1. GAIA, 2017 2. Rollinson, 2018
Easter Langlee, Hooton Park, Winfrith, and Blaise Farm (UK)/New Earth Solutions Group	F- £9 million	2016	1. GAIA, 2017 2. Rollinson, 2018

[10] Chen D. *et al.*, 2014. Waste Management 34: 2466–2486.
[11] Holder, M., 2013. SEPA revokes Scotgen gasification plant license. https://www.letsrecycle.com/news/latest-news/sepa-revokes-scotgen-gasification-plant-licence/ (accessed 08.2019).
[12] McIntyre, J., 2013. Scotgen (Dumfries) Ltd Dargavel energy from waste facility site status report – V12, June. Scottish Environment Protection Agency. http://www.ukwin.org.uk/files/pdf/sepa_dargavel_november_2010.pdf (accessed 08.2019).

4.2. Co-processing of Municipal Solid Waste

P&G generally can make sense only in specific cases, such as under a special regulatory framework, using special waste fractions, or in connection with other thermal plants. These specific cases normally require high effort for (pre-) treatment and high economic inputs. By far P&G for MSW did not seem to be one of the viable options of waste treatment, and Incineration is reported to be a much better approach to MSW treatment.

Yet, interesting fields for P&G processes can be their use in upstream processes in connection with cement kilns, power plants, etc.; and production of special products, like vitrified slag.

Co-processing is the use of waste-derived materials to replace natural mineral resources (material recycling) and/or traditional fossil fuels such as coal, fuel oil and natural gas (energy recovery) in industrial processes. Co-processing is applied worldwide, mainly in the cement industry and in thermal power plants; in a few cases, it is also applied in the steel and lime industry.

Co-processing in cement plants has also become a widespread part of the waste management system in a number of developing and emerging countries. Nevertheless, the share of MSW used in co-processing is still low compared to special waste streams such as used tires, hazardous industrial waste, contaminated soil, biomass residues or sludge from wastewater treatment plants. As co-processing of waste in cement kilns is already widely employed across many developing countries, this WtE option can be realized at short notice. Cement plants are available in almost all countries worldwide and can be upgraded for the use of refuse-derived waste with limited investments.

The potential limiting factors are low gate fees for waste disposal, the distance between the place where waste is generated and the site of the cement plant and low prices for fossil fuels (coal, pet coke, etc.).

Although in several cases co-processing can help overcome financial issues of P&G facilities it is important to note that identical environmental and health hazard issues, as well as disturbances in facility integrity such as corrosion, can be expected.

One country, Japan, has persevered more than any other with commercial MSW Gasification in the last two decades. But, to do so, its operators have had to bolster the process with copious amounts of limestone, coal, oil, and/or natural gas, all of which undermine the sustainability

credentials of the system. Technical reports reveal that in addition to the limestone, typical blends of approximately 100 tons of coal per every 1000 tons of MSW are necessary, along with operating using energy-intensive oxygen-enriched air. Fossil fuels are added to waste for Gasification in at least some facilities in Japan (Hitachi Metals & JFESteel add coke). A further aspect of the Japanese approach has been to have a regime of operating hours much lower than would be considered economically feasible in other countries, namely one of a maximum 250–280 days per year. Even with these impositions, it is now reported that Japan is moving away from Gasification and towards Mass Burn Incinerators, along with a greater focus on waste prevention strategies.

5. PRECONDITIONS FOR THE PYROLYSIS AND GASIFICATION OF MIXED MUNICIPAL SOLID WASTE IN ARMENIA

5.1. Composition of Municipal Solid Waste in Armenia

There is limited data on MSW generation and composition in Armenia. Analysis of the waste generation and composition demonstrates several inherent problems associated with this data.

According to the information provided by the Ministry of Territorial Administration and Infrastructure of RA, annually approximately 650,000 tons of MSW is produced in Armenia. There are no direct measurements of the exact waste amount generated in the country. The provided data is based on a theoretical estimation extrapolated from an average population size and average theoretical waste generation per capita normalized for Yerevan, other urban population, and rural population. This results in possible large uncertainties in waste amounts even for a specific location and will compromise the use of any waste treatment strategy unless properly addressed.

Similarly, the information on waste composition is incomplete and hectic and does not allow for clear conclusions and recommendations for management and treatment strategies. There are multiple issues associated with the data on the MSW composition in Armenia.

1. There are only a handful of studies concentrated solely on few specific locations, including Yerevan (several studies), Hrazdan (several studies), Berd, Vanadzor, Talin, Sevan, Ejmiatsin cities, and Mkhchan, Kotchor and Ahpurak villages. This data by no means covers the entire geography of the country and does not allow for reliable estimations of MSW composition in RA.
2. Even for the locations where several studies have been implemented to check waste composition, the data demonstrates strong variability between studies.
3. Other than one study (Federal Environment Agency of Germany, 2011, see Table 5.1), the waste characterization data is a snapshot information with no regard to waste amount and composition changes over time.

4. The data in different studies is reported either on the waste volume basis, or the waste weight bases or no information is disclosed regarding this matter. Although the information on MSW fractions on the waste volume basis can be valuable for understanding waste collection and transportation, as well as the feasibility of reuse and recycling options, the data is not useful for calculations of waste calorific value and hence, feasibility of any WtE technology. Since no correlation could be made between waste volume and weight fractions (unless for a specific pile of the waste), the methodological differences make the comparison between data from different reports practically impossible.
5. Determined material fractions in different studies are differently organized and grouped, further complicating the comparison between data, and compromising accuracy of conclusions.
6. Standard protocols that require normalized proximate and ultimate analysis are not followed. Thus, according to the normalized sampling, waste samples have to be dried under certain conditions to avoid the effect of external humidity on fraction estimations. This practice, however, is not followed in most of the reports of MSW composition in RA, and wet (as sampled) weights are reported.

The uncertainties in MSW generation and composition in Armenia can have a detrimental impact on the waste management process. For the successful MSW management clear, accurate and current data on waste amount, composition and variability over time should be generated.

In terms of P&G technologies, while the waste amount directly affects the economic feasibility of P&G technologies, the existence of small modular and scalable P&G plants in the market and their capability to operate under different feedstock loads suggests that waste amount estimation for P&G operations are somewhat not strict. Yet, this parameter has to be taken into consideration during calculations of economic feasibility of the operation.

Waste composition and related calorific value of the waste, on the other side, have direct effects on the success of WtE technologies. Although accurate estimation of waste characteristics that can directly affect the feasibility of P&G technologies, such as material fractions, moisture content, HHV and LCV is not possible, here, the gross estimation of waste characteristics, based on the data from studies where waste composition as % weight is presented.

Figure 5.1. Proportion of combustible and non-combustible fractions in Municipal Solid Waste in Armenia

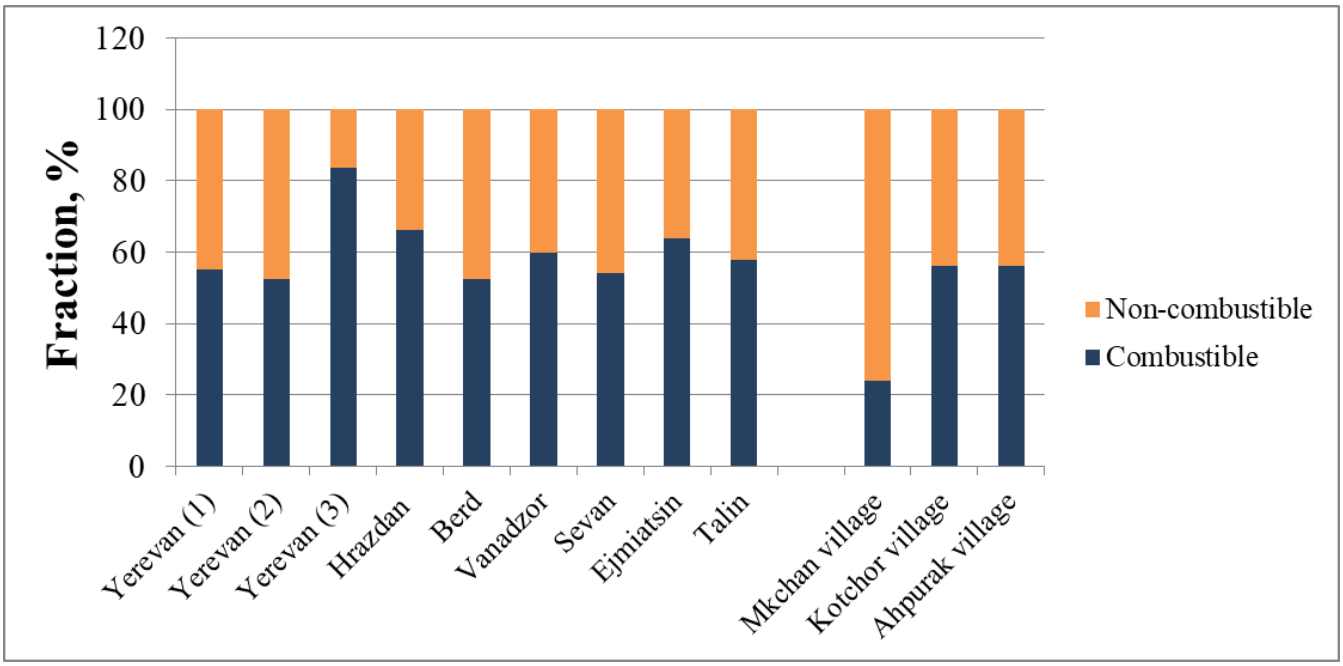

The combustible fraction of the MSW in Armenia ranged between 24.0 (Mkhchan) and 83.6% (Yerevan), with an average of 57.4%. (Table 5.1, Fig. 5.1) with no difference between urban and rural areas. Food is generally the highest combustible fraction of MSW, as expected for a developing country (Fig. 5.2), followed by paper/cardboard. Plastics and in some cases garden waste comprise the other large fractions of the combustible waste (Fig. 5.2).

Moisture content of MSW was calculated assuming only internal moisture[14]. This has been done as the sampling method in the reports of MSW composition in Armenian did not involve waste drying to normalize data for the humidity. Therefore, the current estimation that takes into account only internal moisture of the MSW fraction (a situation that will take place if dried MSW is fed to Pyrolysis or Gasification plants or if the plants have an inbuilt drying stage) is highly conservative. This also suggests that the drying of waste should be practiced to be able to

[14] Calculation was done using data from Seng *et al.*, 2018, Global Journal of Environmental Science and Management, 4(2): 113-126.

get reliable information on feedstock properties for any P&G technology operation, which, in turn, will add costs to the operations. The gross estimation of internal moisture content demonstrates numbers ranging between 33.6% and 49.7 %, both for Yerevan, with an average volume of 39.0% (Table 5.1).

Calculation of LCV and HHV of theoretically dried only combustible feedstock, e.g., combustible fraction containing only internal moisture[15], of MSW in Armenia was calculated using data from Seng *et al.*, 2018[16]. In Armenia, LCV of mixed MSW demonstrates high variation ranging from 4.38 MJ/kg (Yerevan) to 12.0 MJ/kg (Vanadzor) with a country average of 9.04 MJ/kg. Similarly, HHV is ranging from 4.74 MJ/kg (Yerevan) to 13.4 MJ/kg (Vanadzor), with a country average of 9.94 MJ/kg.

Figure 5.2. Major waste fractions in Municipal Solid Waste in Armenia

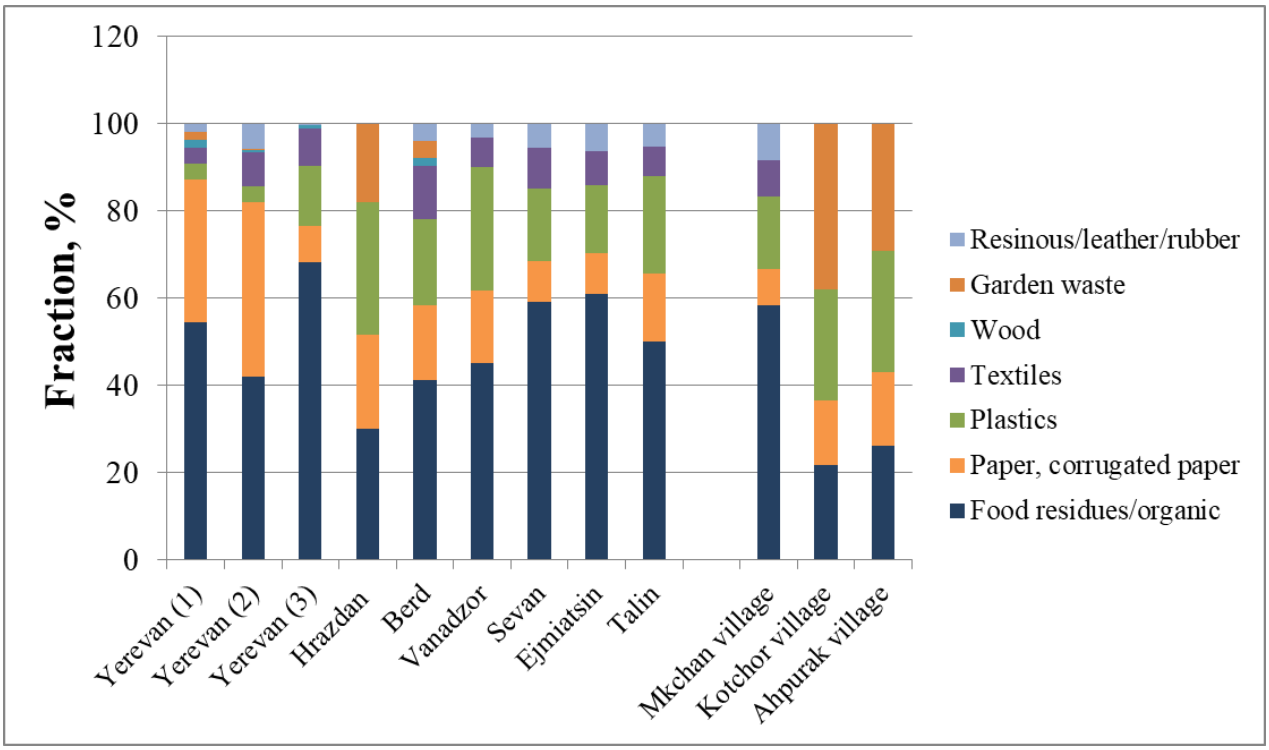

[15] As non-combustible fractions of MSW are not considered as a feedstock for P&G plants, and should be removed from it in feedstock preparation stage, this fraction is omitted from LCV and HHV calculations.
[16] Seng *et al.*, 2018, Global Journal of Environmental Science and Management, 4(2): 113-126.

It is important to note that the literature data on LCV and HHV are highly variable and studies that aim to calculate these values for MSW fractions in Armenia are needed.

Table 5.1. Mixed Municipal Solid Waste characteristics in Armenia

Location	Combustible fraction, %	Non-combustible fraction, %	Moisture content, %	LCV, MJ/kg	HHV, MJ/kg	Reference
Yerevan (1)	55.0	45.0	42.9	4.38	4.74	Arzumanyan G., 2004. MSc Thesis, Lund, Sweden.
Yerevan (2)	52.5	47.5	33.6	5.22	6.57	Arzumanyan G., 2004. MSc Thesis, Lund, Sweden.
Yerevan (3)	83.6	16.4	49.7	6.33	7.43	Lolos *et al.*, 2015. ENVIROPLAN S.A. Report.
Hrazdan	66.1	33.9	33.7	11.3	12.7	Ministry of Urban Development of the Republic of Armenia, 2011. Report.
Berd	52.6	47.4	35.1	9.98	11.3	Butler P. 2008. MSc Thesis, Michigan Technological University, USA.
Vanadzor	60.0	40.0	33.9	12.0	13.4	Federal Environment Agency of German, 2011. Report.
Sevan	54.0	46.0	43.7	8.51	9.71	Federal Environment Agency of German, 2011. Report.
Ejmiatsin	64.0	36.0	44.8	8.11	9.28	Federal Environment Agency of German, 2011. Report.

Talin	58.00	42.0	37.4	10.33	11.7	Federal Environment Agency of German, 2011. Report.
Mkhchan	24.0	76.0	43.2	8.9	10.1	Federal Environment Agency of German, 2011. Report.
Kotchor	56.3	43.7	39.5	9.38	10.7	Ministry of Urban Development of the Republic of Armenia, 2011. Report.
Ahpurak	56.1	43.0	37.4	10.3	11.6	Ministry of Urban Development of the Republic of Armenia, 2011. Report.
Country average	**57.4**	**43.6**	**39.1**	**9.04**	**9.94**	

5.2. Legal framework of Pyrolysis and Gasification technologies in Armenia

As new technologies entering the Armenian market, there is no well-established P&G specific legal framework in the country. Instead, implementation of P&G plants for mixed MSW treatment falls under the scope of numerous general laws and regulations including those related to the Environmental protection (Chapter 1, Appendix 3), Fertilizers (Chapter 2, Appendix 3), Waste management (Chapter 3, Appendix 3), Renewable Energy (Chapter 4, Appendix 3), Quality of equipment (Chapter 5, Appendix 3), Planning, commissioning and operation of industrial plants (Chapter 6, Appendix 3) and Occupational health and safety (Chapter 7, Appendix 3), Fuel (Chapter 8, Appendix 3).

Legal framework of waste management

In 2016 the Government of RA by its protocol decision N49 has approved "Strategy for development of the municipal solid waste management system for 2017-2036". The strategy is aimed at the development of a MSW management system in compliance with EU standards,

including sanitation services and landfills. It sets up targets to be achieved as the result of implementation of the strategy, such as 10 new landfills complying with EU environmental and sanitary standards, 95% MSW collection rate, up to 20% waste classification rate, etc. However, at the current point there are no tangible steps undertaken towards these goals (para. 20, Appendix 3).

According to the Governmental Decree of RA N650 from 16 May 2019 "On approval of the program measures for 2019-2023 activities of the Government of RA", strategy on sanitation system of the Republic of Armenia is to be elaborated by the end of August, 2019 (Annex 1 Governmental Decree of the RA N650, para. 226.3) (para. 20, Appendix 3). The mentioned strategy is currently being developed; however, it is not circulated yet as the deadline has not expired.

Therefore, waste management, including hazardous waste, such as mixed MSW in Armenia, is regulated mainly by the Law of RA "On waste" (paras. 19, 20, 23, Appendix 3), other laws and subsequent by-laws, such as the Law of RA "On licensing" (para. 26, Appendix 3), Governmental Decree of RA N2291 "On approval of the order of adoption of drafts on normatives of waste generation and disposal thereof" (para.25, Appendix 3), Governmental Decree of RA N47 "On approval of the order of passportization of waste" (para. 23, Appendix 3), Order of the Minister of Nature Protection of RA N430 "On approval of the list of waste classified based on hazardousness" (para. 21, Appendix 3), Order of the Minister of Health N20 "On approval of hygienic and epidemiological requirements N2.1.7.001-9 for use, transportation and storage of hazardous chemical waste and hazardous chemical substances" (paras. 24, 25, 61, Appendix 3).

Waste hierarchy concept, specifying that "reuse and recycling of waste are preferred to the option of its incineration for energy purposes", as such is missing. According to Article 6, part 2 subpoint b) of the Law of RA "On waste", one of the main approaches of the state policy in the area of waste management are reduction of waste generation and risk level through, inter alia, complex utilization of raw material resources for the reduction of waste quantity (volumes). It is obvious from this formulation that the different ways of using waste are not considered within a certain hierarchy, unlike the principle widely adopted in the EU legislation and practice. The

phrase "complex utilization of raw material resources" does not in any way express the preference of other ways of using waste against incineration (para. 19, Appendix 3).

While the "Strategy for development of the municipal solid waste management system for 2017-2036" in para. 68 (para. 20, Appendix 3) mentions that a public awareness campaign shall widely focus on "reduce, reuse, recycle" principle, the Section VII on proposed changes to the legislation of RA is silent about incorporating the EU waste hierarchy concept into national legislation.

Legal framework regarding the feedstock

Current legislation of RA does not pose any obligation on citizens to sort the municipal solid waste. According to the Order of the Minister of Nature Protection of RA "On approval of the list of waste classified based on hazardousness" (para. 21, Appendix 3), the waste is classified into 5 separate categories. Mixed, unclassified solid waste (9110010001004 unclassified waste generated from permanent and temporary residential areas and 91200400 01 00 4 unclassified household waste from organizations) are considered hazardous wastes of the 4th category.

The relationship with respect to handling, treating and shipment of hazardous waste is regulated by the Order of the Minister of Health "On approval of hygienic and epidemiological requirements N 2.1.7.001-9 for use, transportation, and storage of hazardous chemical waste and hazardous chemical substances" (paras. 24, 25, 61, Appendix 3).

While the Republic of Armenia is a Party to the Basel Convention "On the control of transboundary movements of hazardous wastes and their disposal", it is applied only to the transboundary relationship (para. 22, 24, Appendix 3).

Planning, building, and commissioning of Pyrolysis and Gasification facilities

In RA, planning, building, and commissioning of waste treatment facilities, regardless of the designated waste category, including MSW, is subject to licensing for use of the hazardous waste, EIA, environmental and building permits.

Licensing for use of the hazardous waste is regulated by the Governmental Decree of RA "On approval of the licensing order of activities for use of hazardous waste in the Republic of Armenia" (para. 38, Appendix 3).

The requirements for obtaining a building permit are set out in the Governmental Decree of RA "On approval of the order of granting building permits in the RA and declaring void several governmental decrees" (para. 39, Appendix 3). A building permit is granted by a municipal authority: in specific cases, it might be subject to prior evaluation of the urban development authority adjacent to the Government of RA.

Pyrolysis and Gasification facilities are also subject to mandatory EIA according to the Law of RA "On environmental impact assessment and expertise" (para. 3, 40 Appendix 3). The location of the plant, buffer zones, thermal efficiency index, public participation, and other issues shall be addressed within the EIA (paras. 41, 42, 43, 44, 46, Appendix 3). However, although waste management issues should be addressed within the EIA report, the obligation of the operator to prepare a waste management plan as a separate document for a particular facility is not clearly stated under the EIA legislation of the RA.

Environmental impact assessment is conducted by the project proponent or it is commissioned to a specialized consulting company, and the EIA report is submitted by the proponent to the Ministry of Environment for environmental impact expertise. Environmental impact expertise is conducted by the Ministry of Environment (State Non-Commercial Organization (SNCO) "Center for Environmental Impact Expertise"). Based on the EIA report, the Ministry issues a positive or negative environmental impact expertise conclusion. A positive conclusion of environmental expertise is a mandatory precondition for applying for environmental permits. EIA procedure is subject to control by the Inspectorate for Nature Protection and Mineral Resources adjacent to the Government of RA (para. 13, Appendix 3).

Environmental permits (waste utilization permit, water use permit and atmospheric air pollution permit) are granted by the Ministry of Environment based on permit applications following a positive EIA conclusion. The operator submits an application for a permit to the Ministry of Environment, which conducts an assessment of the application and accompanying documents. Based on the assessment results, a permit is granted or rejected. Adherence to the terms of the permits is controlled by the Inspectorate for Nature Protection and Mineral Resources adjacent to the Government of RA (para. 13, Appendix 3). All permit holders are obliged to submit periodic reports about their emissions and waste storage and disposal to the Ministry of Environment and the State Statistical Service of the Republic of Armenia.

Relevant legal acts establishing the abovementioned regulations, besides the Law of RA "On environmental impact assessment and expertise" are:

1. Law of RA "On specially protected natural areas" (para. 41, Appendix 3)
2. Law of RA "On the Lake Sevan" (para. 41, Appendix 3)
3. Land Code of RA (paras. 4, 42, Appendix 3)
4. Governmental Decree of RA N625 "On Approval of the order of preparing and adopting of land use plans" (para. 42, Appendix 3)
5. Governmental Decree of RA N1325 "On Approval of the order of public notice and implementation of public discussions" (para. 46, Appendix 3).

Law enforcement in the sphere of planning, building, and commissioning is carried out in three directions: environmental control with respect to EIA (para. 13, Appendix 3), urban development control, according to the Governmental Decree of RA N624 "On establishing the order of state control over urban development activities" (para. 54, Appendix 3), and control over the technical regulations in accordance with the Law of RA "On technical regulation" (para. 54, Appendix 3).

With respect to environmental control, it should be mentioned that it is not sufficiently effective due to the lack of staff proficiency and technical, laboratory equipment.

Operation of Pyrolysis and Gasification plants

The operation of P&G plants is mainly governed by two branches of legislation. Environmental legislation covers the relationship related to EIA, pollution of land, emissions to the atmospheric air, emissions to the water resources, heavy metals, clean development mechanisms, odors, noise, POPs (paras. 1-15, 47-51, 53 Appendix 3). Environmental issues are regulated by the following legal acts:

1. Law of RA "On Environmental impact assessment and expertise" (para. 3, Appendix 3)
2. Law of RA "On waste" (paras. 19, 20, 23, Appendix 3)
3. Stockholm Convention "On persistent organic pollutants" (para. 11, Appendix 3)
4. Law of RA "On protection of the atmospheric air" (paras. 5, 9, 12, Appendix 3)
5. Land Code of RA (paras. 4, 42, Appendix 3)

6. Water Code of RA (para. 8, Appendix 3)
7. Law of RA "On ensuring sanitary epidemiological safety of the population of RA" (paras. 10, 35, Appendix 3)
8. Governmental Decree of RA N124 "On establishing the general requirements of protecting the land from pollution, the list of harmful substances polluting the land and the order of estimating the pollution level of lands and declaring void Governmental Decree N1277-N from 24 August, 2006" (para. 4, Appendix 3).
9. Governmental Decree of RA N160 "On approval of the upper permissible concentration of substances polluting the atmospheric air in residential areas" (paras. 5, 6, Appendix 3)
10. Governmental Decree of RA N1673 "On approval of the order of preparation and adoption of normatives for substances polluting the atmospheric air and declaring void governmental decrees of RA N 192 from 30 March 1999 and N953-N from 21 August, 2008" (para. 5, Appendix 3).
11. Governmental Decree of RA N974 "On implementation of programs within the Kyoto Protocol on CDMs of the UNFCCC" (para. 7, Appendix 3)
12. Order of the Minister of Nature Protection of RA N464 "On approval of the methodology of calculation of permissible emissions of industrial wastewater to the water resources" (para. 8, Appendix 3)
13. Order of the Minister of Urban Development of RA N79 "On approval of construction norms "HHSHN22-04-2014" protection from noise and making changes to the Order of the Minister of Urban Development N82 from 1 October, 2001" (para. 10, Appendix 3).

The second branch of legislation governing the relationship of operation of pyrolysis and gasification plants is technical safety legislation. For this purpose the following areas are addressed: low voltage equipment, electrical magnetic compatibility, machinery safety, equipment used in an explosive environment, noise from the equipment, providing by the producer instructions for exploitation (pars. 29-37, Appendix 3). While these requirements are clearly set out in relevant technical regulations, pressure equipment is not regulated, save for that in gas plants.

The abovementioned issues are regulated by the following legal acts:

1. Law of RA "On state regulation of ensuring technical safety" (para. 29, Appendix 3)
2. Law of RA "On ensuring sanitary and epidemiological safety of the population of RA" (paras. 10, 35, Appendix 3)
3. Governmental Decree of RA "On establishing the technical regulation of low voltage equipment and declaring void Governmental Decree N150-N from 3 February, 2005" (para. 30, Appendix 3)
4. Governmental Decree of RA "On approval of technical regulation on electrical magnetic compatibility" (para. 31, Appendix 3)
5. Governmental Decree of RA "On approval of technical regulation of the safety of machines and mechanisms" (paras. 32, 36, Appendix 3)
6. Technical Regulation of the Customs Union "On safety of equipment envisaged for work in explosive environment" (para. 33, Appendix 3)
7. Order of the Minister of Health "On Approval of the sanitary norms N2-III-11.3 "Noise in workplace, residential and public buildings and residential construction sites" (para. 35, 47, 66, Appendix 3).

P&G equipment as well as the plant is subject to technical safety expertise under Governmental Decree of RA N1359 "On approval of the order of conducting technical safety expertize" (para. 37, Appendix 3). State control during the operation of the plant is carried out by the Inspectorate body for urban development, technical and fire safety adjacent to the Government of RA.

Occupational health and safety legislation

Occupational health and safety legislation covers the relationship related to the workspace air pollutions, noise from turbines and transportation, individual protection means, medical equipment available at the workplace, fire and explosion safety. These issues are regulated by the following legal acts:

1. Labor Code of RA (paras. 55, 57, 59, 60, 61, 71, Appendix 3)
2. Law of RA "On fire safety" (para. 62, Appendix 3)
3. Governmental Decree of RA N1631 "On approval of the technical regulation of individual protection means" (para. 58, Appendix 3)

4. Order of the Minister of Health “On approval of hygienic and epidemiological requirements N 2.1.7.001-9 for use, transportation, and storage of hazardous chemical waste and hazardous chemical substances” (paras. 24, 25, 61, Appendix 3)
5. Order of the Minister of Health N20 “On approval of the sanitary rules and norms N2.2-002-05 “Hygienic classification of labor according to the harmful and dangerous factors of the workplace, heaviness and stress indexes of the labor process” (paras. 56, 58, Appendix 3)
6. Order of the Minister of Health N138 “On approval of the sanitary norms N2-III-11.3 “Noise in workplace, residential and public buildings and residential construction sites” (para. 35, 47, 66, Appendix 3)7. Order of the Minister of Territorial Administration and Emergency Situations N595 “On approval of fire safety rules and declaring void the order of the Minister of Emergency Situations N263 from 26 July 2012 “ (paras. 62, 63, Appendix 3).

Standards applicable to Pyrolysis and Gasification products

Currently, there are no specific technical regulations for the quality of Pyrolysis and Gasification products in RA. This means that general standards for technical safety and technical regulations deriving from the Law of RA “On state regulation of ensuring technical safety” apply (para. 29, Appendix 4).

Customs Union Technical Regulation 013/2011 "Requirements for aviation and vehicle petrol, fuel for vessels and diesel fuel, fuel for reactive engines and fuel oil" (para. 72, Appendix 3) establishes rules for the circulation of fuels in the market, safety requirements and compliance assurance. It also sets forth separate characteristics for vehicle petrol, diesel fuel, fuel oil, reactive engine oil, and aviation petrol and vessel fuel. It is mandatory that the fuel on the market shall be accompanied by compliance certificate.No regulations for the quality of syngas, bio-oil and biochar exist. By definition biochar, bio-oil and syngas quality shall be controlled according to technical regulations, if these are adopted. This, however, does not reflect scientific data on P&G product quality when hazardous feedstock is treated. This gap is of utmost importance for the safe use of P&G products in RA.

In relation to the waste from P&G treatment of mixed MSW in RA, there is no similar concept to an Environmental Protection Agency (EPA) "The derived-from rule" that states that any waste derived from the treatment, storage, or disposal of a listed waste is deemed hazardous. National legislation of RA establishes an exhaustive list of hazardous waste (para. 21, Appendix 3).

5.3. Environmental enforcement

As mentioned above, P&G facilities are subject to mandatory EIA. The operator submits an application for a permit to the Ministry of Environment, which conducts an assessment of the application and accompanying documents. Based on the assessment results, a permit is granted or rejected.

Adherence to the terms of the permits is controlled by the Inspectorate for Nature Protection and Mineral Resources adjacent to the Government of RA. All permit holders are obliged to submit periodic reports about their emissions and waste storage and disposal to the Ministry of Environment and the State Statistical Committee of the RA. The Inspectorate for Nature Protection and Mineral Resources exercises supervision prescribed by law.

In the cases when the Inspectorate observes deviations from normal operation or receives complaints, it conducts further investigations of environmental pollutants produced in the facility. The Inspectorate may apply sanctions in the field of environmental protection, as well as regarding the use and reproduction of subsoil and mineral resources.

Additionally, regular environmental monitoring of air and surface and groundwater in RA is done by the "Center for Environmental Impact Expertise" SNCO.

Monitoring of ambient air pollution in the RA is supervised through the hybrid survey network, consisting s of 16 main stationary active sampling and automated observation stations on a daily basis, and of 211 mobile passive sampling observation points, where weekly monitoring is accomplished. In accordance with RA and international requirements, monitoring of main pollutants - SO_2, NO_X, CO, dust and ground-level ozone (as a secondary pollutant) is accomplished in stationary observation stations, and monitoring of only SO_2 and NO_2 is done in mobile observation points.

Surface water monitoring network consists of 131 observation points of water objects of (rivers, reservoirs, Arpa-Sevan tunnel and Lake Sevan) 6 basin management areas (Northern, Akhuryan, Hrazdan, Sevan, Araratyan, Southern). Water quality is described by up to 45 physicochemical indicators (major anions and cations, nutrients, heavy metals, primary organic pollutants) with a frequency of 5-12 times per year. Water quality assessment is supervised according to RA Government N75-N decree (January 27, 2011).

Underground freshwater monitoring survey network consists of 100 groundwater springs of 6 water basin management areas (Northern, Akhuryan, Hrazdan, Sevan, Araratyan, Southern), which include 25 self-flowing wells, 32 borehole wells, and 43 natural springs. The monitoring of water volume, level (pressure) and temperature is done 6 times per month. Also, groundwater quality monitoring is accomplished in 40 springs twice a year, in each of which around 40 indicators are determined (major anions and cations, metals and salt regime elements).

In a case when the P&G facility is not located in the proximity of these sampling points, if the EIA demonstrates that significant pollution is expected from the facility operation, new observation stations and sampling points might be added to the existing network to achieve continuous monitoring of the pollution.

However, the RA is currently lacking behind in adherence with the standards and enforcement of environmental laws and regulations, many issues arise with insufficient monitoring due to the lack of the personnel and available technologies for online and off-line detection of the entire range of possible environmental emissions and pollutants expected to be produced during P&G of mixed MSW, and an absence of a platform for environmental compliance information sharing makes the enforcement of compliance with environmental standards complicated.

5.4. Market for products and final disposal of process residues

The overall lower quality of P&G products compared to their alternatives suggest the vulnerability of these product markets and subsequent economic risks and the need for upgrades of the product quality to correspond market standards (see Chapter 2).

Another, perhaps more important issue concerning the products of P&G technologies treating mixed MSW in Armenia is the hazardous nature of this waste. This implies that the use of P&G products of MSW treatment in Armenia might be risky in terms of environmental pollution and

health and safety hazards. As such, an important and crucial part of the application of P&G technologies in Armenia in terms of product use should be the strong regulatory field and enforcement of regulations to assure adequate product quality.

Since currently no quality standards for P&G products (except for the bio-oil as fuel; see Chapter 5.2) are established in Armenia, the potential market performance of these products will be evaluated assuming sufficient quality to correspond to the product market, and environmental and health and safety standards.

The main market for all three products of P&G is their use as fuels for heat generation. This application is straightforward and is the cheapest option. A few more potential markets also exist.

Chemical industry that can transform syngas into more viable materials and/or fuels is absent. Therefore, the next potential market for syngas is electricity generation. For syngas use as a fuel for heat and/or electricity generation, infrastructure to connect to either gas or electricity users should be established for the successful syngas market.

In addition to the use as a fuel for heat generation, another potential market of bio-oil in RA is it's use as a fuel for transportation. This, however, requires upgrades of the product quality to avoid issues arising from the variable, and sometimes un-anticipated bio-oil quality, specifically in terms of mixtures and residues of bio-oils, and acidity. Every additional step taken in this direction will affect the economic viability of Pyrolysis process.

The use of biochar produced during the P&G treatment of various homogenous feedstocks as soil amendment has been described in many countries. In these cases, in addition to the economic feasibility of biochar production, it is important that the product meets the requirements of environmental standards. However, taking into account the hazardous nature of MSW in RA, biochar use as a soil amendment cannot be considered due to a very high potential of leaching of hazardous compounds and eco-toxicity. The only potential use of biochar can be as a fuel for heat generation.

As the prices of P&G products largely depend on technology type and feedstock prices, as well as the regulatory background of the country, it is currently impossible to estimate the potential

prices of P&G products in Armenia. Yet, to be economically viable the P&G product prices should be lower than the prices for the alternative fuels currently existing in the market. Below are the comparison of the prices of the products that are alternative to P&G products as of August 2019 (Table 5.2).

Table 5.2. Substitute products and their prices (as of August, 2019) in Armenian market

Substitute products	Current price
Diesel oil	470 AMD/l
Regular oil	500 AMD/l – 5,000 AMD/l
Gasoline	430- 470 AMD/l
Liquid petroleum gas (LPG)	200 AMD/l
Natural gas for consumption	139 AMD/m^3
Natural gas for cars	290 AMD/ kg
Charcoal	125 – 130 AMD/kg

Final disposal of process residues is another major issue in the implementation of P&G in Armenia. Currently, no market exists for usable fractions of P&G process residues such as ash and slag. Moreover, the same concerns of the elevated levels of hazardous compounds in these residues exist. Exactly like with other hazardous wastes in RA, no strict standards and enforcement in their disposal exists.

6. FEASIBILITY OF PYROLYSIS AND GASIFICATION OF MIXED MUNICIPAL SOLID WASTE IN ARMENIA

6.1. Evaluation of indicators for assessment of feasibility of Pyrolysis and Gasification for mixed Municipal Solid Waste treatment in Armenia

To assess the feasibility of P&G technologies for mixed MSW treatment in Armenia, a modified decision-making matrix developed by the Deutsche Gesellschaft fur Internationale Zusammenarbeit (GIZ)[17] will be used.

The decision-making matrix has three objectives:

- To provide an overview of preconditions for building and operating P&G technologies, e.g. waste amount and composition, regulatory framework, etc.,
- To assess the suitability of the P&G technologies for different framework conditions,
- To offer an orientation of whether an intended P&G technology is applicable, if further improvements to the overall waste management system are required or if the P&G technology does not fit.

The matrix consists of 9 essential parameters to consider in the local context. These are:

1. Overall level of waste management
2. Suitable quantities of waste
3. Composition of waste
4. Waste characteristics (calorific value, moisture content)
5. Additional transportation time and distance for MSW to P&G plant
6. Experience in the efficient operation of waste management facilities
7. Market for products and final disposal of process residues
8. Legal framework for safe and environmentally sound operation of P&G facilities
9. Enforcement of the environmental requirements for P&G

[17] Deutsche Gesellschaft für Internationale Zusammenarbeit (GIZ) GmbH, 2017. Waste-to-Energy Options in Municipal Solid Waste Management. A Guide for Decision Makers in Developing and Emerging Countries.

The first five parameters are reflected in the country profile of MSW generation, composition, and management. Experience in the efficient operation of waste management facilities demonstrates countries' ability and experience in building and operating complex waste management systems. Market for the products and final disposal of process residues is the main step in revenue generation, and subsequently, the economic viability of P&G facilitates. The last two parameters, e.g., legal framework, and enforcement of regulation in the context of environmental requirements are embodied in the country's legislative framework, but are separate parameters as enforcement of regulations are not always in place, specifically in the developing countries.

For each of the nine parameters listed above, local conditions from green (highly advanced) to red (very underdeveloped) in the matrix are evaluated.

GREEN	**YELLOW**	**RED**
The P&G technology is most probably suitable.	More information and/or some improvements to local conditions may be required for the successful planning and implementation of a P&G project.	The P&G technologies are not suitable. It is strongly recommended to improve or change the specific local conditions

As an orientation, the number of red, yellow and green fields for P&G can be interpreted as follows:

Matrix totals	Is the technology suitable for my context?
Seven or more green fields All others yellow	In principle, the technology seems applicable. However, parameters in yellow should be investigated in more detail and improvements should be initiated.
Less than six green fields All others yellow	P&G might be suitable, but the given conditions do not yet favor its application. Decision makers should assess the given conditions in more detail

	before initiating a P&G project or focus on a technology that has more green fields.
One or more red fields	KNOCK OUT CRITERIA: There are severe deficiencies when applying P&G. All red highlighted conditions must be improved before initiating a project for the technology or select a technology that appears only in yellow and green fields.

Based on the matrix data, recommendations for the feasibility of P&G technologies for MSW in Armenia are made (Table 6.1).

Note: It is crucial to keep in mind that different set of questions should be used depending if the P&G operations are privately financed or if a financial input from government is needed. For all the operations, indicators that are related to legislation and policies for environmental and hazard risks should be included. Yet, issues related to the waste amounts and qualities, as well as successful operation of the facilities will have a lesser importance if the P&G companies are responsible for their economic performance.

It is important to stress that in the current chapter the feasibility under the current MSW management conditions is assessed. For more specific cases, Appendix 2 can be used to establish the feasibility of a specific Pyrolysis or Gasification technology. It is very important to pay attention that an addition of each extra step in the waste collection, handling, separation, etc., the economic feasibility of the process will be challenged, and financial burdens on investors, government and citizens that pay for the service will be created.

1. Overall level of waste management

A basic requirement for successful implementation of P&G is the existence of an advanced waste management system which is based on the separate collection and treatment of different source-separated waste streams. Recyclables such as paper, cardboard, plastics, glass, metals, etc. are sorted and directed to the recycling industry. The management of hazardous waste is controlled. The systematic waste collection is another factor that can affect the choice of P&G technologies.

When waste collection is missing, additional investments in creating the infrastructure can affect the performance of P&G. As described in Chapter 1, waste management in Armenia is not well organized and multiple challenges in waste collection, sorting, transportation, and general management exist in the country. Therefore, **"Overall level of waste management"** indicator is marked red.

Understandably, if the investors plan to introduce the necessary waste management steps along with the P&G technologies, the economic feasibility of the P&G technologies will be negatively affected and should be very carefully estimated.

2. Suitable quantities of waste for P&G

Available waste quantities are the minimum requirement of economically sound P&G operation. Waste quantities also determine the risk-free P&G operations. In this context "available" refers to suitable waste fractions that can be supplied at acceptable costs to the facility and cannot be economically recycled. Yet, the choice of small-scale or scalable, modular P&G plants can result in successful business operations. Therefore, although no exact data on waste quantities in Armenia exist, the indicator **"Suitable quantities of waste for P&G"** is optionally marked green.

Exact waste generation in the country or in designated locations should be calculated for each specific P&G facility in respective business plans to avoid economic failures.

3. Composition of waste

Separation of MSW at the source is the best precondition for any WtE, including P&G, as hazardous and non-combustible waste fractions reduce the performance of P&G facilities. Higher levels of hazardous waste in MSW will also affect the product quality in P&G and the environmental performance of the facility.

Since no separation of non-combustible and hazardous materials exists in MSW management in Armenia, and mixed MSW is classified as a 4th category hazardous waste, **"Composition of waste"** indicator is marked red.

4. Waste characteristics (calorific value, moisture content)

If the calorific value of MSW is <7 MJ/kg due to the high content of organic fraction and moisture content, P&G technologies are considered not feasible. High humidity will affect the quality of the products, and the integrated drying stage will make the process too expensive to be economically feasible. Calorific values >8 MJ/kg indicate that P&G are suitable options for MSW management.

LCV and HHV of the combustible fraction of mixed MSW demonstrate high variation ranging from 4.38 MJ/kg to 12.0 MJ/kg, and from 4.74 MJ/kg to 13.4 MJ/kg HHV. Internal moisture content in the combustible fraction of the feedstock ranges between 33.6% to 49.7 %. The high variability of waste calorific value and moisture content suggests that P&G feasibility is location dependent, and, hence, "**Calorific value of the waste**" is marked yellow.

It is important to note that waste characteristics estimations are based on incomplete data and are extrapolated using theoretic approximations. Additionally, the calculations assume sorted and dried MSW. Importantly, there is a strong need for a new data generation.

5. Additional transportation time and distance for MSW to P&G plant

Additional transportation time and distance for MSW to P&G plant is a crucial indicator with a very strong effect on the economic performance of P&G facilities. Each additional kilometer of road transportation of waste increases costs for collection, as well as congestion and greenhouse gas emissions in metropolitan areas. Ideally, distance or time for road transportation of waste will be the same as for the existing waste management situation or less.

In terms of the current situation of MSW management in Armenia, where 340 dumpsites exist, a large geography of the areas of potential waste accumulation is expected. This suggests that additional transportation time and distance might be needed for successful P&G operations. From the other side, the use of modular, transportable P&G systems can tackle this issue. Therefore, the **"Additional transportation time and distance for MSW to P&G plant"** indicator is marked yellow.

6. Efficient operation of waste management facilities

Pyrolysis and Gasification require experienced management of complex waste treatment facilities and well-trained technical staff. The existence and successful operation of such systems

is an indicator that the country is capable of handling large complex waste treatment infrastructure.

There are no fully functional complex waste and wastewater treatment systems in Armenia. Identically, no sanitary landfills and successful landfill gas collection exist. The national and public actors have limited experience with WtE and recruitment of qualified national staff is difficult, if not impossible. Added to this is also limited, and largely unsuccessful, international experiences of P&G technology use for heterogeneous MSW. Under these preconditions, the **"Efficient operation of waste management facilities"** indicator is marked red.

7. Marketing of products and final disposal of process residues

The viable market for P&G products is the main precondition that affects the economic feasibility of these facilities. Similarly, safe disposal of final process residues might become a bottleneck in these operations. If in the current situation a market for similar process residues exists and hazardous residues can be disposed of safely in a controlled landfill close to the P&G plant, these technologies can be considered feasible.

Generally, a potential market for syngas, bio-oil, and biochar as fuels exists in Armenia. The main success of the market for syngas, bio-char, and bio-oil is less stringent environmental standard of the products compared to those in the EU or USA. The situation is more complex with the syngas, as in this case infrastructure to connect to either gas or electricity users does not yet exist.

Currently, no market exists for usable fractions of P&G process residues such as ash and slag and their disposal would not deviate from the current disposal strategies. Thus, the **"Marketing of products and/or final disposal of process residues"** is marked green.

The establishment of a strong regulatory framework for P&G products that takes into account their potential to contain toxic products is an important step in the development of P&G technologies in RA. As such, product market and subsequent economic feasibility of P&G operations will be subject to legislation changes.

8. Legal framework for safe and environmentally sound operation of P&G facilities

An existing comprehensive legal framework that has to include high environmental standards for emissions to air, water, and soils, odors and noise as well as health and safety requirements, for waste management is a precondition for the successful P&G operation. It also should define requirements for P&G facility location, quality, and application. Legislation should be tailored to the national circumstances and not just be copied from an industrialized country.

In Armenian legislation, multiple laws and policies exist that cover certain aspects of the P&G technology application. Yet, these laws are not specifically designated for P&G, and as such may fall short in covering all of the necessary aspects of safe and sound P&G application. Specifically, MSW in RA is categorized as a hazardous waste due to the lack of separation of hazardous compounds. As such the technologies related to MSW, as well as the products of MSW treatment should be covered by regulation where the hazardous nature of MSW is taken into account. For example, the tendency of heavy metal accumulation in biochar during P&G should be reflected in the regulation of the product use but is not addressed in the current legislation. Therefore, with certain reservation, "**Legal framework for safe and environmentally sound operation of P&G facilities**" is marked yellow.

9. Environmental monitoring of P&G technologies

In addition to the requirements of a strong legislative framework that includes high environmental standards for emissions to air, water and soils, odors and noise, adherence to the environmental standards should be a crucial part of the P&G facility operation.

While Armenian legislation addresses environmental standards of different facilities and operations, and EIA is a pre-requisite for the permitting of the P&G facilities, the country is lacking behind in adherence to the standards and enforcement of these laws and regulations.

The lack of personnel and available technologies for online and off-line detection of the entire range of possible environmental emissions and pollutants expected to be produced during P&G of mixed MSW, absence of a platform for environmental compliance information sharing makes the enforcement of compliance with environmental standards complicated. Based on this, **"Environmental monitoring of P&G technologies**" indicator is marked red.

Table 6.1. Evaluation of indicators for assessment of feasibility of Pyrolysis and Gasification for mixed Municipal Solid Waste treatment in Armenia

Indicator	Value
Overall level of waste management	Waste management in Armenia is not well organized and multiple challenges in waste collection, separation, transportation, and general management exist in the country.
Suitable quantities of waste	Although no exact data on waste quantities in Armenia exists, the possible use of modular small-scale or scalable systems can result in successful business operations.
Composition of waste	No separation of non-combustible and hazardous materials exists in MSW management in Armenia.
Waste characteristics (calorific value, moisture content)	LCV and HHV of the combustible fraction of mixed MSW demonstrate high variation ranging from 4.38 MJ/kg to 12.0 MJ/kg, and from 4.74 MJ/kg to 13.4 MJ/kg HHV, compared to the >8 MJ/kg suitable for P&G. Internal moisture content in the combustible fraction of the feedstock ranges between 33.6% and 49.7%.
Additional transportation time and distance for MSW to P&G plant	The geography of the areas of potential waste accumulation is very large, with 340 dumpsites. There is a general lack of organized and centralized waste collection and transportation system. Yet, the modular, transportable system use can tackle this issue.

Efficient operation of waste management facilities	There are no fully functional complex waste and wastewater treatment systems in Armenia. The national and public actors have limited experience with WtE and recruitment of qualified national staff is difficult, if not impossible.
Market for products and final disposal of process residues	Generally, a potential market for all 3 P&G products exist in Armenia. There are no specific hazardous waste management requirements and practices in Armenia.
Legal framework for safe and environmentally sound operation of P&G facilities	In Armenian legislation, multiple laws and policies exist that cover certain aspects of the P&G technology application. Yet, these laws are not specifically designated for P&G, and as such may fall short in covering all of the necessary aspects of safe and sound P&G application, specifically, relating to the hazardous nature of MSW in Armenia.
Enforcement of the environmental requirements for P&G	There is a lack of personnel and available technologies for online and off-line detection of the entire range of possible environmental emissions and pollutants expected to be produced during P&G of mixed MSW, absence of a platform for environmental compliance information sharing.

Overall, the analysis of 9 indicators for assessment of feasibility of P&G for mixed MSW treatment in Armenia demonstrates that the majority of the preconditions for P&G application in RA are either missing or incomplete. This further implies that for the potential introduction of P&G facilities in Armenia (given that technologies with proven success in MSW treatment are developed) all red marked preconditions must be well established and all yellow marked preconditions should be improved.

7. FACTORS WITH POTENTIAL EFFECTS ON PYROLYSIS AND GASIFICATION OF MUNICIPAL SOLID WASTE IN ARMENIA UNDER THE CHANGING WASTE STRATEGY

The successful operation of WtE technologies, including P&G, highly depends on the framework conditions of MSW management. For countries with a well-defined and organized waste management framework, the role and function of each WtE technology can be defined with a higher certainty than in developing countries that either do not have an organized waste management system or are in the process of defining their waste strategy. As such, it is important to view P&G technologies in the framework of the changing waste management sector. This includes a clear understanding of the role of P&G in national waste strategy, specifically in the context of integrated waste management (IWM). Additionally, with an improvement of the country's waste management, clear changes are expected in terms of waste quantity and quality. These changes will ultimately affect the feasibility and economic success of the P&G technologies during transition from current MSW management system to a more organized waste management system in Armenia.

7.1. Pyrolysis and Gasification in the context of waste management

The successful waste management system is a precondition for the operation of different types of WtE technologies, including P&G.

In countries with a well-organized waste management system, MSW management follows the IWM approach with an inherent waste hierarchy concept (Pic. 7.1). Waste hierarchy considers the actions of waste management in hierarchical order of preference and aims to focus on (in order):

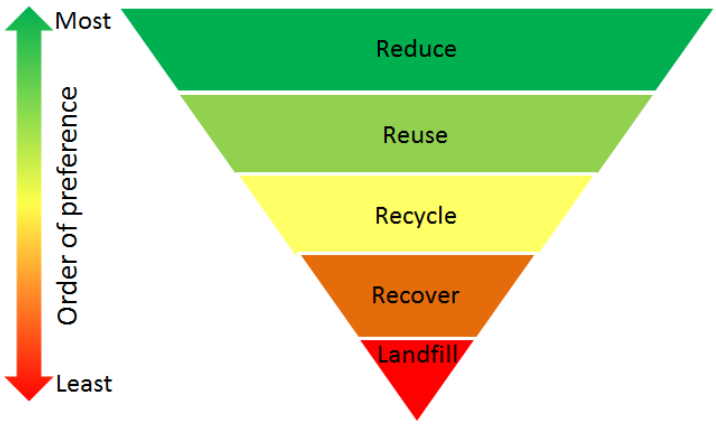

Picture 7.1. Waste hierarchy

- Reduction of waste (preventive action),

- Reuse process by which the materials are reused without being transformed,
- Recycling process where the unused material is transformed by means of an industrial process,
- Recovery process by attaching an economic value to waste for the extraction of material or energy,
- Disposal process intended as a final solution.

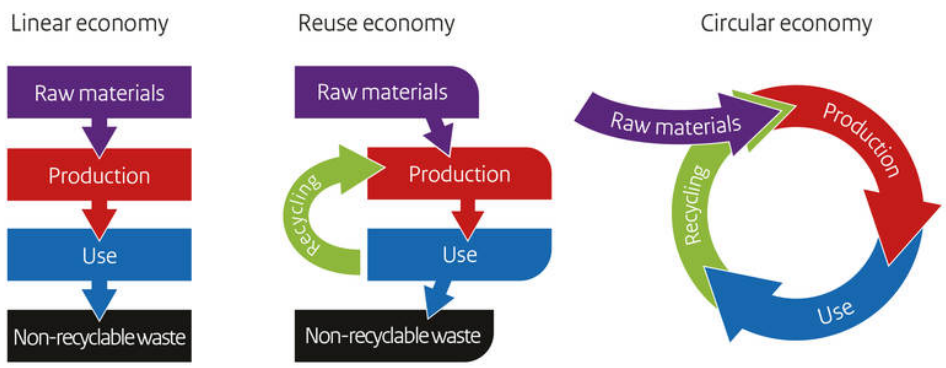

Picture 7.2. From a Linear to a Circular Economy (*source: Ellen MacArthur Foundation*)

The waste hierarchy model has been developed to address waste generation and accumulation in the traditional Linear Economy (LE) model, with an underlying 'take-make-consume-throw away' approach. It is based on extensive use of materials for the production of goods, without consideration of reusing and recycling. Inherently, high levels of waste are produced in LE. This model was subsequently replaced by Reuse model, where material reuse and recycling are practiced to reduce waste quantity. The most modern Circular Economy (CE) model is based on a few core principles such as minimization of material use, maximization of the life span of products and their parts, and, subsequently, reduced waste production. The core vision of moving from traditional LE towards the novel CE model aims to facilitate the implementation of the IWM approach by reduction of resource consumption and minimization of waste production along with decreased environmental impact (Pic. 7.2).

In the waste hierarchy approach in both LE and CE models, P&G are considered a complementary technology for the recovery of energy from the remaining non-recyclable MSW fractions, and should therefore not compete with waste reduction, reuse and recycling measures

(Pic. 7.3). This suggests that P&G should be discussed in the framework of IWM and that the waste stream that is treated by P&G should not include components that could be otherwise reused or recycled. Armenia is currently defining its waste strategy and, logically, upon development, the implementation of the IWM approach in the waste strategy of RA would strongly affect the feasibility of P&G technologies. Therefore, the place and role of P&G technologies in waste management should be yet defined. Moreover, the potential integration of waste hierarchy and IWM approach in RA waste management will affect feedstock quality and quantity, and therefore viability of P&G application, and should be taken into account in the projection of P&G success as waste management approach in Armenia.

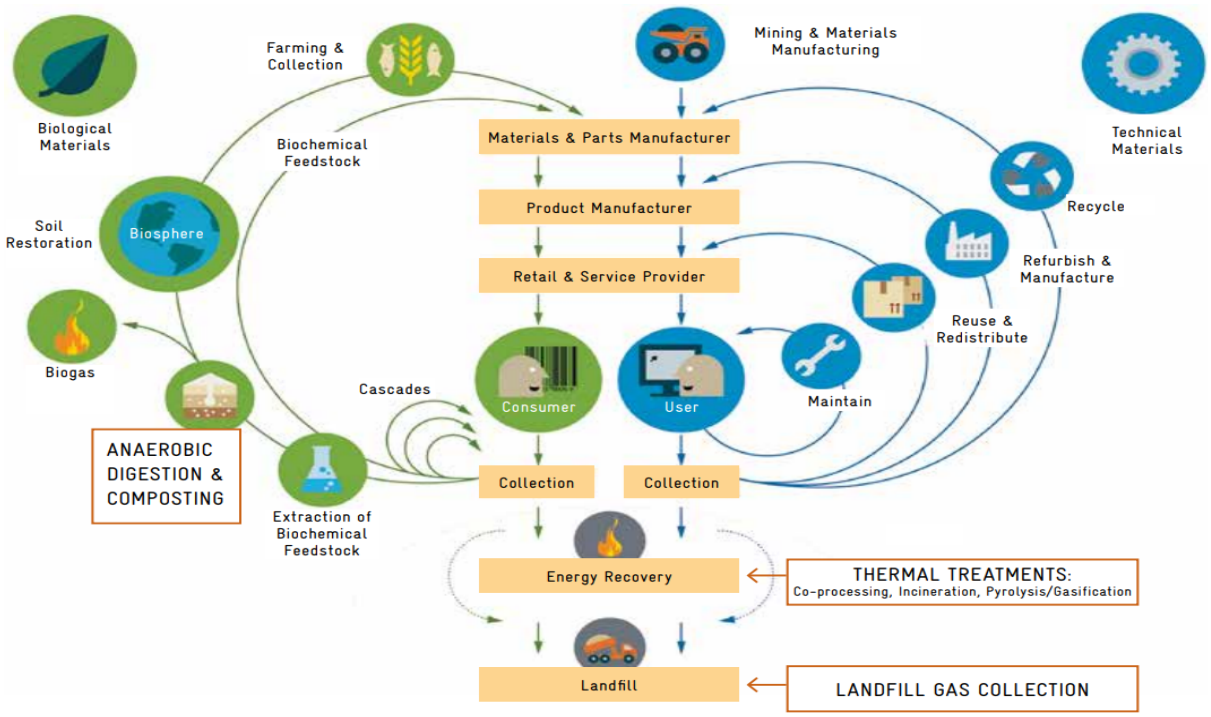

Picture 7.3. The place of the Pyrolysis and Gasification technologies in Circular Economy
(*source: Ellen MacArthur Foundation*)

7.2. Competition for high calorific value wastes

The changing feedstock quantities and quality, anticipated during the transition of the current Armenian waste management system to a more modern waste management system types might

have a drastic effect on P&G applicability. In this sense, two feedstocks/streams are of importance. First, in many countries, where successful P&G technologies operate as a result of co-processing MSW with higher calorific value waste, end-of-use tires represent a potential feedstock. The second important stream is combustible recyclable materials, such as paper/cardboard and plastics.

7.2.1. End-of-use tires

On average, 17.2 tons of end-of-use tires are produced in Armenia, mainly by the mining industries. The disposal of tires in waste dumpsites/landfills is prohibited in Armenia by the Law of RA on Waste (2004) (Appendix 3). Yet, most of the used tires are burned for heat generation in greenhouses, and even illegally dumped with MSW.

As by definition, the end-of-use tires are not a component of MSW in Armenia, they should not contribute as a feedstock for P&G operations that are receiving solely MSW. Yet, due to a high calorific value of tires, their use in co-processing in P&G operation might be an attractive solution and might be considered by potential investors and operators of P&G facilities.

In recent years 2 main markets/end users for used tires in Armenia emerged. One of the main directions of reuse of tires is in the defense sector, where tires are used to fortify the border patrol points. Periodically, tire collection events are organized by individuals and organizations and the collected tires are transported to border areas.

Another end-user of the used tires is “Am-Eska” LTD, a tire recycling company established in 2014. Since the establishment, the company has organized multiple tire collection facilities throughout Yerevan and adjusting areas. The company also collaborates with the mining industry and collects and transports the end-of-use tires to the treatment location, where bio-oil and bio-char briskets are produced. These products are sold as fuel. Syngas is used internally for heat generation and metal scraps are compressed and stored for further sale.

The existence of 2 markets/end users for used tires in Armenia suggests potential competition for tires as a P&G feedstock for co-processing with MSW should new companies entering the P&G market in Armenia be interested in this waste fraction.

7.2.2. Combustible recyclable fraction

In MSW-based P&G, plastic is one of the main waste streams in terms of its calorific value, with LCV and HHV order of magnitude higher than in food waste. Although the calorific value of paper and cardboard is much less than the calorific value of plastics, they are superior to food waste in this sense as well. The formal system of MSW collection and disposal in Armenia does not imply separate collection, sorting, or any other type of waste treatment[18]. The major part of waste plastic and paper and cardboard is disposed of as a component of MSW and could contribute to the suitability of MSW as a feedstock for P&G.

Yet, there is emerging formal and informal waste sorting and recycling sector in the country. Informal plastic and paper/cardboard separation and recycling take place in waste bins (by waste pickers), and on a much larger scale, in almost all major dumpsites in the country upon arrival (for more details, please refer to Shindyan, 2012). The separated useful fractions are supplied to the buy-in centers.

Formal waste sorting and recycling sector in Armenia is ever-increasing and many companies and social enterprises are currently involved in paper/cardboard and plastic sorting and recycling (Table 7.1).

The major involvement of both informal and formal sectors of plastic and paper/cardboard sorting and recycling affects the actual MSW composition. Moreover, a transition from informal to formal plastic and paper/cardboard separation and recycling is expected in the light of multiple governmental and private actions, including the subscription-based plastic collection in the office buildings, installation of waste disposal bins that offer rewards for this activity, and an increase of price and the subsequent ban of single-use plastic bags in the country.

[18] Shindyan D., 2012. Recycling potential in Armenia. MSc Thesis. Central European University, Budapest, Hungary.

Table 7.1. List of companies/social enterprises engaged in paper/cardboard and plastic recycling in Armenia

Company/social enterprise name	Recycled materials
"Vazgen Abgaryan" LLC	Paper/cardboard
"Plastic" OJSC	Plastic
"Poli-serv" LLC	Plastic
"Carton-Tara" LLC	Paper
SOFTEX Co. LTD	Paper/cardboard
"Cleanland" LLC	PET plastic, paper
"AM-ESKA" LLC	Plastic
"Proper" LLC/ Proper Plastic	Plastic
"Armplast" LLC	Plastic
"H Group" LLC	Paper
"ISSD - Innovative Solutions for Sustainable Development of Communities" NGO	Paper, plastic
"APAGACOMMUNITY" CJSC	Paper, plastic
"Eco Aghb" NGO	Paper, plastic

The emergence of a plastic and paper/cardboard recycling sector is of crucial importance for the success of the P&G technologies for MSW in Armenia. On a national level, recycling identifies improvements of waste hierarchy approach and in this sense, is more favorable than recovery by P&G technologies.

On a more local level, the removal of plastic and paper/cardboard fraction from MSW suggests decreased calorific values of the feedstock, and can directly negatively affect the success of P&G technologies. As such, the potential investments in P&G technology in Armenia should take into consideration the current trends of recycling and the projections of future development scenarios.

8. CONCLUSION AND RECOMMENDATIONS

The extreme risks associated with the current state-of-the-art P&G operations together with organizational issues around waste management in RA make it infeasible to establish mixed MSW-based P&G technologies in the country.

In addition to the largely missing preconditions for mixed MSW treatment in P&G facilities in RA, the hazardous nature of mixed MSW raises questions about the environmental and health and safety performance of P&G operations and products along the entire life cycle.

Given the reported shortcomings and failures of the current internationally available MSW-treating P&G plants, technological improvements/upgrades and proven long-term successful operations of these plants are the main prerequisites for implementation of P&G technologies for processing mixed MSW worldwide and in RA. As such, the introduction of P&G facilities for MSW treatment in RA should be not rushed until international experience demonstrates that safe and long-term operations are possible.

Nevertheless, if improved and well operating P&G plants with a history of failure-free operation become available, a strong national framework for successful and, most importantly, safe operations of P&G technologies that treat MSW should be established prior to the introduction of these facilities in RA. This framework should include several aspects such as defined national waste strategy, strong regulatory background along with the enforcement of regulations and standards, and technological expertise.

Taking into account international experiences of mixed MSW treatment in P&G facilities, and the current organizational and legislative state of waste management in RA, at *the national level* the following recommendations are made:

- Defining national waste strategy, that incorporates waste hierarchy concepts, and practices separation of hazardous and non-hazardous waste fractions should be the first step in successful waste management, including economically and environmentally feasible P&G applications.

- Careful selection of investors/P&G operators and technologies with a strong record of failure-free long-term P&G operation, with experience in management of technologically complex facilities and well-trained technical staff, should be practiced.
- Due to multiple high profile failure cases for economic reasons, RA government is strongly advised to avoid provision of financial help/subsidies to the investors/operators of P&G technologies treating MSW.
- Environmental framework legislation in terms of planning and tendering, obligations of operators, prerequisites for permitting and safety and environmental standards should be assessed and tailored to the RA context prior to the P&G technology introduction to the country. Perhaps the most important regulation that should be developed is the standards for the P&G products that account for the hazardous nature of MSW in Armenia.
- The establishment of strong environmental monitoring and enforcement of environmental standards, backed by technical and professional capacity to detect the entire range of potential pollutants should precede the building and operation of P&G facilities in the country.
- Financial guarantees should be requested and embodied in the permit applications from operators for successful shutdown and dismantling of failed P&G facilities to avoid becoming a graveyard for these facilities.

Following the establishment of a strong national field for successful and, most importantly, safe operations of P&G technologies that treat MSW in RA, at the *investor/operator level,* two main directions of prerequisites for successful operation emerge. The first direction relates to the economic and technologically successful operation, while the second one is related to the adherence to national standards. The approaches to addressing economic and technological issues differ between different investor/operators, plant types and depend on the scale of the technology. In small-scale or scalable plants (mobile or static) many, but not all, of the preconditions of technologically successful operation can be managed to be met, albeit affecting the economic performance of the operation. However, performance related to legislation and policies for environmental and hazard risks will depend on the country legislative framework and should be considered in changing the country's waste management profile.

The checklist for the assessment of a specific Pyrolysis and/or Gasification application for operators is provided in Appendix 1.

APPENDICES

Appendix 1. Checklist for assessment of Pyrolysis and Gasification application

For assessment of a specific Pyrolysis and/or Gasification application, it will be helpful to go over a series of checklists to make sure that all the important factors have been considered. Checklists for economic, technical, environmental and considerations, health and safety, and training and staffing needs are given below.

Economic considerations checklist

- What is the cost of the feedstock (or economic gain through avoidance of paying for waste disposal)?
- What is the cost of feedstock transportation and preparation?
- What is the equipment cost?
- How much does operation, e.g., utilities, maintenance, and repair, salaries, cost?
- What is the market, and what are the costs and prices of the products?
- What is the cost of disposal of remaining outputs?
- What other costs or benefits should be taken into account?
- Is there an overall economic benefit?

Technical considerations checklist

- Have the materials, components, and operation process been appropriately selected such that they can withstand temperature, pressure and weight stress during operation?
- Are there relevant operation standards?
- Have the relevant operation standards been complied with? Does the equipment have the appropriate rating for certain area classifications such as the Appareils destinés à être utilisés en ATmosphères EXplosives (ATEX) rating for explosive atmospheres in the EU?
- What pressure relief system provision is there to prevent/minimize deflagrations?

- Is the equipment suitable for locally available feedstocks, providing they meet the defined specifications? What deviation from the specification is permissible without causing problems?
- Is the equipment able to be manufactured and repaired appropriately and economically under local conditions?
- What warranties are offered on sub-contracted items and what level of support can be expected and for how long?
- How will the syngas be treated? Does it meet emissions standards if emitted untreated? Will it be flared, utilized for Pyrolysis or as an energy source?
- Is the pre- or post-processing of feedstock/bio-oil/biochar is needed? For example pre-processing could involve grinding or sieving the material and post-processing could involve the mixing of biochar with other materials to form a biochar mineral complex.

Environmental considerations checklist

- Can the equipment operate effectively at design throughputs in a steady-state? Does the system require full programmable logic circuit control or other intermediate control system?
- Does the equipment meet gaseous and particulate emissions standards (or equivalent)? These can be obtained from the local, State or National Environmental Protection Agency (or equivalent).
- Does the equipment meet relevant standards for noise and odor beyond the site boundary?
- Are air, water, and soil quality directives complied with?
- Are there any specific risks associated with a particular feedstock? For example, carcinogens may be produced when pyrolyzing plastics under certain conditions.
- Does the feedstock come from a sustainably produced source? This is not directly related to the process and is an indirect consideration in terms of environmental compliance of the process/system.
- Does obtaining the use of a particular feedstock have any other negative environmental implications (on humans, animals, plants, biodiversity, water)? This is not directly related

to the process and is an indirect consideration in terms of environmental compliance of the process/system.

- Is the equipment able to produce products, such as syngas, bio-oil, and biochar of suitable quality? Do the products have any components which are toxic to human and biodiversity?
- Does the plant instrumentation provide sufficient data on the process so that a life cycle analysis may be performed to measure the energy, greenhouse gas and economic benefits of the process?
- Are there any solid or liquid (e.g., tar) wastes to be disposed of? What are the relevant regulations and how will this/these material/materials be effectively dealt with?

Health and safety considerations checklist

- A risk assessment/ Hazard and Operability Analysis (HAZOP) should be conducted as an essential part of the design phase of the project.
- During all phases of the process – loading, start-up, operation, shutdown, unloading, and storage – the following risks for operators and the public should be considered, and any relevant regulations adhered to:
    - Fire and explosion (including dust explosion on hot surfaces, combustion during storage);
    - Particulate and gaseous emissions;
    - Gas leakage (particularly CO);
    - Noise pollution.
- Protocols for emergency situations should be developed.

Training and staffing checklist

- What level of training is required for plant operation?
- How many shifts will the plant require to operate it?

- How will the staff be trained and what proof can be provided or certificated that they are proficient in its operation?
- Are all staff fully aware of the nature of the process, operating conditions, safety considerations, and potential hazards?
- Who is responsible for plant commissioning, start-up, and handover?
- Are long term operation and maintenance contracts available from the plant provider (if purchased)?

Appendix 2. Decision making support matrix

As described in Chapter 6, a modified decision-making matrix was used to assess the feasibility of P&G for MSW treatment in Armenia. The same matrix can be used to assess the feasibility of a specific Pyrolysis or Gasification technology for the treatment of any given feedstock under specified conditions. The matrix can be applied to systems that differ in their scale (small–scale to commercial), operational conditions, feedstock, and, most importantly, can allow feasibility assessment upon the development of modern, better performing P&G plants.

Additionally, to understand the feasibility of P&G and its place and potential compared to the other WtE technologies, a comparison between all types of WtE technologies can be included. This will allow assessing P&G technologies in a larger frame and making decisions as to which technologies can be preferred under certain conditions.

1. Overall level of waste management

A basic requirement for successful implementation of WtE is the existence of an advanced waste management system which is based on the separate collection and treatment of different source-separated waste streams. Recyclables such as paper, cardboard, plastics, glass, metals, etc. are sorted and directed to the recycling industry. The management of hazardous waste is controlled. The systematic waste collection is another factor that can affect the choice of WtE technology. When waste collection is missing, additional investments in creating the infrastructure can affect the performance of WtE.

Due to limited experiences and the high capital and operation costs, the applicability and planning of P&G projects should be considered very carefully at all levels of MSW management.

An advanced waste management system that is based on waste streams exists.	The systematic waste collection is organized. Some wastes are directed towards recycling and composting.	Systematic waste collection and disposal in landfills exist. Recycling is not organized systematically.	Absence of systematic waste collection, recycling, and disposal.

Incineration	Incineration	Incineration	Incineration
Co-processing	Co-processing	Co-processing	Co-processing
Anaerobic digestion	Anaerobic digestion	Anaerobic digestion	Anaerobic digestion
Landfill gas collection	Landfill gas collection	Landfill gas collection	Landfill gas collection
Pyrolysis & Gasification	Pyrolysis & Gasification	Pyrolysis & Gasification	Pyrolysis & Gasification

2. Suitable quantities of waste for P&G

The choice of a WtE technology strongly depends on the available waste quantities and the related minimum requirement of economically sound operation. The estimations of waste quantities is a complex task and depends on the projected scale of operations. Small, modular systems will require less waste to operate and might be able to carry continuous operations. Larger commercial-scale facilities will show a stronger dependence on waste qualities. Nevertheless, this indicator should be clearly estimated and accounted for in any feasibility study to ensure economic viability of the applications. Here, the waste quantities for large commercial scale operations are described.

If more than 150,000 metric tons of waste is available per year all technologies are suitable. However, due to limited international experiences with P&G, other technologies are more favorable.

For waste quantities between 50,000 and 150,000 metric tons per year, the cost-effectiveness of incineration should be assessed carefully.

Below 50,000 metric tons P&G and even incineration are too expensive. Cost-effectiveness of co-processing might be impacted by low prices for coal and pet coke.

If waste quantities are below 10,000 metric tons per year anaerobic digestion might be the only favorable technology if the quality of the biomass is acceptable.

More than 150,000 metric tons of waste is available per year.	Approximately 50,000 and 150,000 metric tons per year is available.	Bellow 50,000 metric tons per year is available.	Bellow 10,000 metric tons per year is available.
Incineration	Incineration	Incineration	Incineration
Co-processing	Co-processing	Co-processing	Co-processing
Anaerobic digestion	Anaerobic digestion	Anaerobic digestion	Anaerobic digestion
Landfill gas collection	Landfill gas collection	Landfill gas collection	Landfill gas collection
Pyrolysis & Gasification	Pyrolysis & Gasification	Pyrolysis & Gasification	Pyrolysis & Gasification

3. Composition of waste

The separation of MSW at the source in households is the main precondition for WtE. Hazardous and non-combustible (mineral) fractions should be collected and treated separately. Measures to improve waste separation at source, such as separate collection and treatment of construction and demolition waste and batteries should be initiated. Higher levels of hazardous waste in MSW will affect both the product quality in P&G and environmental performance of the facility.

Organic and non-organic fractions are collected separately. Hazardous & bulky mineral waste is treated separately.	MSW or separate collected waste fractions are some-times mixed with small fractions of mineral and hazardous waste.	MSW is regularly mixed with fractions of minerals or hazardous waste.	MSW is mixed with large amounts of mineral and hazardous waste.
Co-processing	Co-processing	Co-processing	Co-processing
Anaerobic digestion	Anaerobic digestion	Anaerobic digestion	Anaerobic digestion
Landfill gas collection	Landfill gas collection	Landfill gas collection	Landfill gas collection

Pyrolysis & Gasification	Pyrolysis & Gasification	Pyrolysis & Gasification	Pyrolysis & Gasification

4. Calorific value of MSW for thermal processes, organic content

For P&G calorific value is one indicator to decide if MSW is suitable for the process. Autothermic combustion (self-sustaining combustion without additional fuels) of MSW must be ensured throughout the year for P&G.

A high mineral content from construction and demolition waste, glass or ash, high metal content or high humidity from kitchen and garden waste reduce the calorific value. Calorific values >8 MJ/kg indicates that all WtE technologies, including P&G, are suitable options for WtE projects.

P&G technologies with an advanced integrated drying stage are able to treat wet MSW with a calorific value of about 7 MJ/kg. Yet, this might affect the energy consumption of the plant, and therefore economic performance.

If the calorific value is <7 MJ/kg due to humidity, P&G technologies are not feasible. High humidity will affect the quality of the products, and the integrated drying stage will make the process too expensive to be economically feasible. When mineral waste is the main reason for a low calorific value, overall waste management should be improved first before starting with WtE options.

Calorific value is >8 MJ/kg.	Calorific value is between 7 and 8 MJ/kg.	Calorific value is <7 MJ/kg.	Calorific value is <7 MJ/kg. The content of inorganic fractions (is high.
Incineration	Incineration	Incineration	Incineration
Co-processing	Co-processing	Co-processing	Co-processing
Anaerobic digestion	Anaerobic digestion	Anaerobic digestion	Anaerobic digestion
Landfill gas collection	Landfill gas collection	Landfill gas collection	Landfill gas collection
Pyrolysis & Gasification	Pyrolysis & Gasification	Pyrolysis & Gasification	Pyrolysis & Gasification

5. Additional transportation time and distance for MSW to WtE plant

In addition to the access to end-users of the generated products, the economic and environmental impact of additional transportation efforts to WtE facilities must be taken into account. Each additional kilometer of road transportation of waste increases costs for collection, as well as congestion and greenhouse gas emissions in metropolitan areas. Ideally, distance or time for road transportation of waste will be the same as for the existing waste management situation or less.

An increase of transportation time of less than 1 hour or an additional distance of less than 50 km is seen as tolerable for WtE. For an increase in additional transportation time of >1 hour or additional transport distance of >100 km the energy content of the transported waste should be high to be economically and environmentally worthwhile. For additional transportation distance,>200 km rail would be the only legitimate transport means, but it is difficult to manage and possibly unrealistic for MSW.

The use of landfill gas collection at existing landfills implies that waste will be transported the same distance.

For the modular facilities, these issues will be minimized. Yet, if the facility has to be moved around, while waste is collected and stored, economic feasibility and risk/environmental aspects of waste storage should be carefully considered.

Distance or transport time will hardly change compared to the current situation.	Transport time will increase <1 hour, additional distance <50 km.	Transport time will increase >1 hour. Additional transport distance >100 km.	Additional transport distance >200 km and rail transport is not available.
Incineration	Incineration	Incineration	Incineration
Co-processing	Co-processing	Co-processing	Co-processing
Anaerobic digestion	Anaerobic digestion	Anaerobic digestion	Anaerobic digestion
Landfill gas collection	Landfill gas collection	Landfill gas collection	Landfill gas collection
Pyrolysis & Gasification	Pyrolysis & Gasification	Pyrolysis & Gasification	Pyrolysis & Gasification

6. Experience in the efficient operation of waste management facilities

Waste management facilities can be operated by the public sector, the private sector or in cooperation. If the country has experience with well-managed landfill sites, large wastewater treatment plants (public sector) and large chemical or cement plants (private sector) complex systems can be handled locally. Nevertheless, for foreign WtE technologies, long-term support of technology suppliers should be contractually ensured.

Learning from past failed waste management projects, it is clear that WtE requires experienced management and well-trained technical staff. Good communication between the public and private actors is an essential precondition.

Under these preconditions, all technologies might be successful candidates for a WtE project, except P&G due to limited international experience with heterogeneous MSW.

Most actors require capacity building for WtE even if they have experience in managing waste treatment infrastructure. Cement plants are often owned by international companies with in-house knowledge of co-processing which they can provide. Landfill gas collection is technically the simplest approach. These two technologies are more favorable until knowhow about the other technologies is locally available.

If public actors have limited experience with WtE and recruitment of qualified national staff is difficult, landfill gas collection is the most favorable technology. The need for capacity building for co-processing and anaerobic digestion should be assessed carefully; it is easier to cover than incineration and pyrolysis & gasification.

If neither public nor private actors have experiences with the operation of WtE systems, landfill gas collection is the only opportunity after some basic capacity building.

Public and private actors are experienced in efficient running of waste management facilities, also in cooperation.	Public or private actors are experienced, but require capacity building to manage WtE facilities efficiently.	Public actors have limited experience with WtE and recruitment of qualified national staff is difficult for the public and private sector.	Neither public nor private actors have experience with the operation of WtE systems.
Incineration	Incineration	Incineration	Incineration
Co-processing	Co-processing	Co-processing	Co-processing

Anaerobic digestion	Anaerobic digestion	Anaerobic digestion	Anaerobic digestion
Landfill gas collection	Landfill gas collection	Landfill gas collection	Landfill gas collection
Pyrolysis & Gasification	Pyrolysis & Gasification	Pyrolysis & Gasification	Pyrolysis & Gasification

7. Market for products and final disposal of process residues

Except for co-processing in cement plants and landfill gas collection, all other WtE technologies, including P&G, generate process products and residues. If in the current situation a market for similar process products exists and hazardous residues can be disposed of safely in a controlled landfill close to the WtE plant, all technologies can be considered as a candidate for a WtE project.

If no market for process products is developed, but all process residues can be disposed of safely at a controlled landfill close to the plant, then the economic feasibility of WtE, and P&G needs to be carefully assessed. Co-processing and landfill gas collection are more favorable in this situation.

A market for process residues exists. Hazardous residues can be disposed of safely at a controlled landfill close to WtE plant.	No market for process residues. All process residues can be disposed of safely at a controlled landfill close to the plant.	No market for process residues. Safe disposal requires large transport distances	No market for process residues and safe disposal of process residues cannot be made available.
Incineration	Incineration	Incineration	Incineration
Co-processing	Co-processing	Co-processing	Co-processing
Anaerobic digestion	Anaerobic digestion	Anaerobic	Anaerobic
Landfill gas collection	Landfill gas	Landfill gas	Landfill gas
Pyrolysis & Gasification	Pyrolysis & Gasification	Pyrolysis & Gasification	Pyrolysis & Gasification

8. Legal framework for safe and environmentally sound operation of P&G facilities

An existing comprehensive legal framework for waste management is a precondition for the successful P&G operation. Legislation needs to include high environmental standards for emissions to air, water, and soils, odors, and noise as well as health and safety requirements. It also should define requirements for P&G facility location, quality, and application. Legislation should be tailored to the national circumstances and not just be copied from an industrialized country.

Effective enforcement mechanisms should minimize illegal waste management practices to ensure a functioning waste supply chain to P&G facilities. However, legislation should aim at cooperation with the informal sector for collection logistics rather than to further marginalize them.

While co-processing and landfill gas collection mainly build on existing facilities which are often already regulated, anaerobic digestion, P&G and waste incineration require more specific regulation, e.g. with regards to the options of re-using process residues. The current legal framework may still show some deficiencies and will require the development of more extensive legal frameworks before going ahead.

P&G technology can only be considered as appropriate if it does not contradict the waste hierarchy or the overall waste management strategy of a country or state.

A comprehensive legal framework that considers all types of WtE exists. Laws are enforced & a national waste management strategy also covers WtE.	A national legal framework for WtE exists. Any deficiencies in the level of enforcement, ordinances, and bylaws are being addressed.	A national legal framework for WtE is non- or only partially- existent. It can be ensured that international standards are respected in specific projects.	The existing legal framework forbids thermal WtE or there are indications that sufficient emissions standards cannot be enforced.
Incineration	Incineration	Incineration	Incineration
Co-processing	Co-processing	Co-processing	Co-processing

Anaerobic digestion	Anaerobic digestion	Anaerobic digestion	Anaerobic digestion
Landfill gas	Landfill gas	Landfill gas	Landfill gas collection
Pyrolysis & Gasification	Pyrolysis & Gasification	Pyrolysis & Gasification	Pyrolysis & Gasification

9. Enforcement of the environmental requirements

Although there must be a strong legislative framework that includes high environmental standards for emissions to air, water and soils, odors and noise as well as health and safety requirements, adherence to these standards can be a crucial part of the P&G facility operation. In all WtE technologies, and specifically for P&G, international standards on emissions limits, monitoring and enforcement must be guaranteed. Public authorities must be sufficiently trained and equipped for ensuring adherence to environmental standards.

Comprehensive online continuous emission monitoring systems should be a part of successful incineration and P&G technologies. All the incineration and P&G plants should be required to keep track of a variety of contaminants in their emissions, including carbon dioxide, oxygen, and water vapor, total organic carbon, hydrogen chloride, hydrogen fluoride, dust and oxides of both sulfur and nitrogen. These are in addition to a wide range of specific chemical species that might be considered a possible risk in a particular installation. The monitoring must be continuous, providing average readings every half hour and each day.

Liquid and solid discharges should be monitored upon their release from the facility and managed accordingly. Moreover, the environmental performance of the P&G products should be further incorporated into the monitoring. In cases when MSW contains fractions of hazardous waste, enforcement of environmental standards during feedstock transportation and preparation should be practiced.

A comprehensive monitoring and enforcement framework that includes all potential environmental impacts, including for the products, exists.	A national framework for monitoring and enforcement of the environmental performance of WtE exists. Any deficiencies in the level of enforcement, ordinances, and bylaws are being addressed.	National framework for monitoring and enforcement of environmental performance of WtE non- or only partially-existent. It can be ensured that international standards are respected in specific projects.	There are no sufficient and environmental pollution standards or there are indications that these standards cannot be enforced.
Incineration	Incineration	Incineration	Incineration
Co-processing	Co-processing	Co-processing	Co-processing
Anaerobic digestion	Anaerobic digestion	Anaerobic digestion	Anaerobic digestion
Landfill gas collection	Landfill gas collection	Landfill gas collection	Landfill gas
Pyrolysis & Gasification	Pyrolysis & Gasification	Pyrolysis & Gasification	Pyrolysis & Gasification

Appendix 3. Comparative analysis of Municipal Solid Waste-based Pyrolysis and Gasification legislation of Armenia and other states

	EU	USA	Australia	RA	Notes
1. ENVIRONMENTAL PROTECTION					
1.1. Special law or other regulation	- (-)	- (-)	- (-)	1	
1.2. Integrated Pollution Prevention and Control (IPPC)	+ (+)	- (-)		2	
1.3. EIA requirement	+ (+)	+ (+)		3	1. Law of RA "On environmental impact assessment and expertise" 2. Law of RA "On waste"
1.4. Soil Pollution	+ (+)	+ (+)		4	1. Land Code of RA 2. Governmental Decree of RA N124 "On establishing the general requirements of protecting the land from pollution, the list of harmful substances polluting the land and the order of estimating the pollution level of lands and declaring void Governmental Decree N1277-N from 24 August,

					2006”
1.5. Emissions to Atmospheric Air	+ (+)	+ (+)	+ (+)	5	1. Governmental Decree of RA “On approval of the upper permissible concentration of substances polluting the atmospheric air in residential areas” 2. Governmental Decree of RA “On approval of the order of preparation and adoption of normatives for substances polluting the atmospheric air and declaring void governmental decrees of RA N 192 from 30 March 1999 and N953-N from 21 August, 2008”
1.5.1. Upper Permissible Concentrations for Heavy Metals	+ (+)	+ (+)		6	1. Governmental Decree of RA “On approval of the upper permissible concentration of substances polluting the atmospheric air in residential areas”
1.6. Clean Development Mechanisms within the Kyoto Protocol of the Convention on Climate Change	+ (+)	- (-)		7	1. Governmental Decree of RA “On implementation of programs within the Kyoto Protocol on CDMs of the UNFCCC”
1.7. Emissions of Water Resources	+ (+)	+ (+)		8	1. Water Code of RA 2. Order of the Minister of Nature Protection of RA “On approval of the methodology of calculation of permissible emissions of industrial wastewater to the water resources”
1.8. Foul smell/ Odor	+ (+)	+ (+)		9	1. Law of RA “On protection of the atmospheric air”
1.9. Noise Pollution	+ (+)	+ (+)		10	1. Law of RA “On ensuring sanitary epidemiological

				safety of the population of RA” 2. Order of the Minister of Urban Development of RA “On approval of construction norms “HHSHN22-04-2014” protection from noise and making changes to the Order of the Minister of Urban Development N82 from 1 October, 2001”
1.10. Regulation of POPs	+ (+)	+ (+)	11	1. Stockholm Convention “On Persistent Organic Pollutants”
1.11. Application of the Best Available Technologies	+ (+)	+ (+)	12	1. Law of RA “On protection of the atmospheric air”
1.12. Environmental Control	+ (+)	+ (+)	13	1. Law of RA "On Organizing and Conducting Inspections in the Republic of Armenia" 2. Law of RA “Environmental control” 3. Governmental Decree of RA “On approving the general description of the risk-based inspections’ methodology and risk criteria for inspections by the State Environmental Inspection of the RA Ministry of Nature Protection
1.13. Responsibility For Violating Environmental Legislation	+ (+)	+ (+)	14	1. Code of RA on Administrative Offenses 2. RA Criminal Code 3. RA Civil Code 4. RA Tax Code
1.14. Environmental Damage Insurance	+ (+)	+ (+)	15	

2. FERTILIZERS			
2.1. Charcoal as a Fertilizer	- (-)	16	
2.2. Charcoal Certification	- (-)	17	
2.3. Charcoal Labeling	- (-)	18	
3. Waste Management			
3.1. Waste Reuse And Recycling is Preferable to Energy Recovery by Incineration	+ (+)	19	1. Law of RA "On waste"
3.2. Separation of Municipal Solid Waste	+ (+)	20	1. Law of RA "On waste" 2. Minutes of the Meeting of the RA Government on "Strategy for development of the municipal solid waste management system for 2017-2036" 3. «Governmental Decree "On approval of the program measures for 2019-2023 activities of the Government of RA"
3.3. Hazardous Waste Classifier	+ (+)	21	1. Order of the Minister of Nature Protection of RA "On approval of the list of waste classified based on hazardousness"
3.4. Hazardous Waste Labeling	+ (+)	22	1. Basel Convention "On the control of transboundary movements of hazardous wastes and their disposal"

				2. Order of the Minister of Health of the RA "On the approval of n2.1.3-3 sanitary rules and norms for the use of medical waste"
3.5. Passport Issuing for Hazardous Waste	- (-)		23	1. Law of RA “On waste” 2. Governmental Decree of RA “On approval of the order of passportization of waste
3.6. Specific Regulation Of Hazardous Waste Transportation	+ (+)		24	1. Basel Convention “On the control of transboundary movements of hazardous wastes and their disposal” 2. Law of RA “On waste” 3. Order of the Minister of Health “On approval of hygienic and epidemiological requirements N 2.1.7.001-9 for use, transportation and storage of hazardous chemical waste and hazardous chemical substances”
3.7. Waste Storage	+ (+)	+ (+)	25	1. Order of the Minister of Health “On approval of hygienic and epidemiological requirements N 2.1.7.001-9 for use, transportation and storage of hazardous chemical waste and hazardous chemical substances” 2. Governmental Decree of RA “On approval of the order of adoption of drafts on normatives of waste generation and disposal limits” 3. Order of the Minister of Nature Protection of RA “On approval of the exemplary form for calculation of waste generation normatives and drafts of their

			disposal limits”
3.8. Licensing / Authorization of Waste Management Activities	+ (+)	26	1. Law of RA “On licensing” 2. Governmental Decree of RA “On approval of the licensing order of activities for use of hazardous waste in the Republic of Armenia”
4. RENEWABLE ENERGY			
4.1. Promoting Renewable Energy Sources to Prevent Climate Change	+ (+)	27	1. Law of RA “On energy saving and renewable energy”
4.2. Waste Incineration tools are not used in the Renewable Energy sector if Waste Sorting is not Implemented	+ (+)	28	
5. QUALITY OF EQUIPMENT			
5.1. Equipment quality requirements	+ (+)	29	1. Law of RA “On state regulation of ensuring technical safety”
5.1.1. Low Voltage Equipment	+ (+)	30	1. Governmental Decree of RA “On establishing the technical regulation of low voltage equipment and declaring void Governmental Decree N150-N from 3 February, 2005”

5.1.2. Electrical Magnetic Compatibility	+ (+)	31	1. Governmental Decree of RA "On approval of technical regulation on electrical magnetic compatibility"
5.1.3. Machinery	+ (+)	32	1. Governmental Decree of RA "On approval of technical regulation of the safety of machines and mechanisms"
5.1.4. Equipment Used in Explosive Environment	+ (+)	33	1. Technical Regulation of the Customs Union "On safety of equipment envisaged for work in explosive environment"
5.1.5. Pressure Equipment	+ (+)	34	
5.1.6. Noise From Equipment	+ (+)	35	1. Law of RA "On ensuring sanitary epidemiological safety of the population of RA" 2. Order of the Minister of Health "On Approval of the sanitary norms N2-III-11.3 "Noise in workplace, residential and public buildings and residential construction sites"
5.2. The Equipment Manufacturer must also provide Operating Instructions	+ (+)	36	1. Law of RA "On standardization" 2. Governmental Decree of RA "On approval of technical regulation of the safety of machines and mechanisms"
5.3. Control	+ (+)	37	1. Governmental Decree "On approval of the risk-based inspection checklists in the scope activities of Fire and Technical Safety Inspectorate of the Ministry of Emergency Situations of the RA" 2. Governmental Decree of RA "On approval of the

				order of conducting technical safety expertize”
6. DESIGN / CONSTRUCTION / OPERATION				
6.1. Licensing	+ (+)	+ (+)	38	1. Governmental Decree of RA “On approval of the licensing order of activities for use of hazardous waste in the Republic of Armenia”
6.2. Permission	+ (+)	+ (+)	39	1. Governmental Decree of RA “On approval of the order of granting building permits in the RA and declaring void several governmental decrees”
6.3. EIA / EIE	+ (+)	+ (+)	40	1. Law of RA “On environmental impact assessment and expertise”
6.3.1. Location	+ (+)	+ (+)	41	1. Law of RA “On environmental impact assessment and expertise” 2. Law of RA “On specially protected natural areas” 3. Law of RA “On the Lake Sevan”
6.3.2. Buffer / Sanitary Areas	+ (+)	+ (+)	42	1. Land Code of RA 2. Governmental Decree of RA “On Approval of the order of preparing and adopting of land use plans”
6.3.3. Construction	+ (+)	+ (+)	43	1. Law of RA “On environmental impact assessment and expertise”
6.3.4. Thermal Efficiency	+ (+)	+ (+)	44	1. Law of RA “On environmental impact assessment

Index				and expertise”
6.3.5. Waste Management Plan	+ (+)	+ (+)	45	
6.3.6. Public Participation	+ (+)	+ (+)	46	1. Law of RA “On environmental impact assessment and expertise” 2. Governmental Decree of RA “On Approval of the order of public notice and implementation of public discussions”
6.4. Noise			47	1. Order of the Minister of Health “On Approval of the sanitary norms N2-III-11.3 “Noise in workplace, residential and public buildings and residential construction sites”
6.4.1. Noise From Transportation	+ (+)		48	1. Convention on Road Traffic
6.4.2. From Machines and Mechanisms	+ (+)		49	1. Governmental Decree of RA “On approval of technical regulation of the safety of machines and mechanisms”
6.4.3. From Air Conditioners, Air Purification and Ventilation Systems	+ (+)		50	1. Order of the Minister of Health of the RA “On Approval of the N 2.1.7.017-14 sanitary rules and norms for sanitary epidemiological and hygienic requirements for equipment and materials for air preparation, filtration and purification”
6.4.4.From Steam Turbines	+ (+)		51	1. Governmental Decree of RA “On approval of technical regulation on the operation of power plants and networks”

6.5. Certification / Conformity Assessment	+ (+)	52	1. Law of RA “On technical regulation”
6.6. Real-time Monitoring of Emissions	+ (+)	53	
6.7. Control	+ (+)	54	1. Law of RA “On technical regulation” 2. In regards to environmental control the legal acts referred to in line 13 are applied 3. Governmental Decree of RA “On establishing the order of state control over urban development activities in the Republic of Armenia”
7. OCCUPATIONAL HEALTH AND SAFETY			
7.1. Occupational Health and Safety Legislation	+ (+)	55	1. Labor Code of RA
7.1.1. Risk Assessment	+ (+)	56	1. Order of the Minister of Health “On approval of the sanitary rules and norms N2.2-002-05 “Hygienic classification of labor according to the harmful and dangerous factors of the workplace, heaviness and stress indexes of the labor process”
7.1.2. Collective Protection Means	+ (+)	57	1. Labor Code of RA
7.1.3. Individual Protection Means	+ (+)	58	1. Order of the Minister of Health “On approval of the sanitary rules and norms N2.2-002-05 “Hygienic classification of labor according to the harmful and

			dangerous factors of the workplace, heaviness and stress indexes of the labor process”
7.1.4. Safety Instructions	+ (+)	59	1. Labor Code of RA
7.1.5. Emergency Procedures	+ (+)	60	1. Labor Code of RA
7.2. Substances Hazardous for Health	+ (+)	61	1. Labor Code of RA 2. Order of the Minister of Health “On approval of hygienic and epidemiological requirements N 2.1.7.001-9 for use, transportation and storage of hazardous chemical waste and hazardous chemical substances”
7.3. Fire and Explosion Safety	+ (+)	62	1. Law of RA “On fire safety” 2. Order of the Minister of Territorial Administration and Emergency Situations “On approval of fire safety rules and declaring void the order of the Minister of Emergency Situations N263 from 26 July 2012“
7.3.1. Flammable Gas	+ (+)	63	1. Order of the Minister of Territorial Administration and Emergency Situations “On approval of fire safety rules and declaring void the order of the Minister of Emergency Situations N263 from 26 July 2012“
7.3.2. Special setting for the connection and shutdown of the Gas Appliance	+ (+)	64	
7.3.3. Zoning of	+ (+)	65	

Explosive Areas			
7.4. Noise	+ (+)	66	1. Order of the Minister of Health "On Approval of the sanitary norms N2-III-11.3 "Noise in workplace, residential and public buildings and residential construction sites"
7.5. Equipment to be Monitored	+ (+)	67	
7.5.1. Periodic testing of machinery / equipment	+ (+)	68	
7.5.2. Periodic Testing of Electrical Equipment	+ (+)	69	
7.5.3. Periodic Testing of Pressure Equipment	+ (+)	70	
7.6. Control	+ (+)	71	1. Labor Code of RA
8. FUEL			
8.1. Requirements for Fuel	- (-)	72	1. Customs Union Technical Regulation "Requirements for aviation and vehicle petrol, fuel for vessels and diesel fuel, fuel for reactive engines and fuel oil"

Notes

** The "RA legislation" column lists the numbers of relevant sections in the further narration.*

*** The boxes in green indicate that the relevant legislation is adopted in the RA, in the case of yellow the legislative norms are general in nature and additional regulation is needed, and in the case of red the regulation is missing.*

**** Empty boxes indicate that no information on relevant regulation is available.*

LEGISLATIVE REGULATION

Introduction

This study examines EU, US and Australian legislation in the context of P&G. The presence or absence of regulations is indicated by the + and - characters in the corresponding columns. The observation of EU legislation is conditioned not only by its effectiveness and development, but also by the commitment of the RA to approximate legislation in the field of environmental protection with the force of the Comprehensive and Enlarged Partnership Agreement (CEPA) signed between the EU and the RA on 24 November, 2017.

In addition to the foregoing, the RA, being a member of the Customs Union (CU), has undertaken to bring its national technical regulations into line with the CU technical regulations.

The main focus of this study is on the legislative issues of the RA in the following thematic areas:

1. environmental protection,

2. fertilizers,

3. waste management,

4. renewable energy,

5. quality of equipment,

6. design, construction, operation,

7. occupational health and safety,

8. fuel.

1. ENVIRONMENTAL PROTECTION

1.1. Special law or other regulation

1. Pyrolysis and Gasification as waste treatment methods are not regulated by special legal acts in the RA. Instead, waste management activities are regulated by environmental protection, waste management and other related legislation.

1.2. Integrated Pollution Prevention and Control (IPPC)

2. The concept of Integrated Pollution Prevention and Control (IPPC), which is one of the key links of EU environmental legislation, is currently not adopted in the RA. The draft Law on "Environmental Policy" stipulates appropriate regulations, but it has not yet been discussed by the RA National Assembly.

   For certain types of nature use under current Armenian legislation, businesses are required to obtain separate permits for the use of certain resources (e.g. water resources) as well as for emissions of pollutants (e.g. atmospheric air emissions).

1.3. EIA requirement

3. According to Article 14 part 4 subpoint 6 of the Law of RA "On environmental impact assessment and expertise", in the field of waste management hazardous waste **collection, storage, utilization,** processing, **reprocessing,** removal, neutralization, disposal and burial activities are subject to environmental impact assessment and expertise. Implementation of such activities without a positive expert environmental impact expertise conclusion is prohibited.

   In Armenia environmental impact assessment (EIA) is conducted by the "Center for Environmental Impact Expertise" SNCO of the RA Ministry of Environment. The expertise is carried out on the basis of EIA report, resulting in a positive or negative environmental impact expertise conclusion. EIA is conducted by the project proponent or it is commissioned to a specialized consulting company.

   According to Article 4 of the Law of RA "On waste":

   Waste Collection - an activity aimed at removal of waste and its disposal in the specially provided areas and structures, which also includes sorting of waste for further recycling or removal

   Waste Storage - temporary placement of waste in the specially provided areas and structures for its further recycling or removal.

   Waste Utilization - use of waste for production of goods, generation of energy or other purposes.

   Waste Processing, Reprocessing - implementation of technological operations related to change of physical, chemical or biological characteristics of waste.

   Waste Recycling - use of waste as a secondary material or energy resource.

   It is clear from the foregoing definitions that P&G of MSW in RA, as a type of hazardous waste collection, storage, utilization, processing, reprocessing and recycling activity is subject to environmental impact assessment and expertise.

1.4. Soil pollution

4. Land Code of RA lays down general rules for the permissible use of land, including measures to prevent desertification, erosion, pollution, waterlogging, salinization of soils and other phenomena (Article 8). This rule is mandatory for all land users. For the purpose of protecting human health and the natural environment, the Government sets out the general requirements for the protection of soil from pollution, the list of soil pollutants, the upper permissible limit normatives for soil pollutants, the procedure for assessing the extent of soil contamination.

   Governmental Decree "On establishing the general requirements of protecting the land from pollution, the list of harmful substances polluting the land and the order of estimating the pollution level of lands and declaring void Governmental Decree N1277-N from 24 August, 2006" applies to all categories of soil in the RA in case of installation, design, construction, reconstruction, exploitation of various facilities and is mandatory for all land users. General requirements for soil protection against pollution include:

   a) disposal and recycling of waste, emissions, discharges, wastewater and their sediments through measures to prevent environmental pollution;

   b) storage and transportation of pesticides, mineral fertilizers and other chemicals through measures to prevent environmental pollution;

   c) provision of purification structures in projects of newly constructed industrial organizations and technological lines to exclude chemical contamination of soils.

   The abovementioned Governmental Decree defines:

   1. chemicals or their mixtures (including pesticides) polluting soil,
   2. values of diagnostic indices characterizing the degree of soil degradation,
   3. degree of chemical contamination of soils by sanitary number,

4. degree of chemical contamination of soils according to the categories of hazardous pollution and hazard classes of organic and inorganic compounds in the soil.

1.5. Emissions to atmospheric air

5. According to Article 10 of the Law of RA "On protection of the atmospheric air", the upper permissible concentrations of atmospheric air pollutants and the upper permissible normatives for the physical harmful effects are defined in order to assess the state of the atmospheric air. These normatives should be in the interests of nature protection and human health. The upper permissible concentrations of atmospheric air pollutants and the upper permissible normatives for the physical harmful effects are uniform throughout the RA. If necessary, stricter normatives may be set for individual areas. These normatives and the methods for their determination shall be approved and put into effect in accordance with the procedure established by the Government of the RA.

   According to Article 12 of the Law, for the purpose of protecting atmospheric air, normatives for the upper permissible emission limits from stationary and mobile sources of pollution and for the upper permissible levels of the physical harmful effects of pollutants are set. These normatives are set for each stationary and mobile source of emissions.

   The normatives for the upper permissible emissions of atmospheric air pollutants and for the upper permissible levels of the physical harmful effects on the atmospheric air are set in such a way that, taking into account the development prospects of a given region, the emissions of pollutants and physical harmful effects from a given area and other areas do not result in exceeding the upper permissible concentrations of atmospheric air pollutants and the upper permissible levels of the physical harmful effects. The normatives for upper permissible emission limits are established for those sources of emission or their

groups whose required use of air calculated on the basis of design maximum emission indices exceeds two billion cubic meters per year or exceeds two thousand cubic meters per second.

In accordance with the procedure established by the Government of the RA the normatives for the upper permissible emissions from stationary sources of pollution shall be adopted or rejected by the Authorized Body within 30 days from the date of application by organizations with stationary sources of pollution. In the event of failure of the Authorized Body to respond within the time limit set by this paragraph, the normative of upper permissible emissions of atmospheric air pollutants should be considered as accepted.

Enterprises, establishments and organizations whose activities are related to emissions of atmospheric air pollutants shall undertake technical, economic, organizational and other measures to ensure compliance with the conditions and requirements set out in the emission permits; take measures to reduce pollutant emissions; ensure good condition of environmental facilities, equipment and their continuous and effective operation; consistently improve technological processes by introducing the best available technologies, as well as conduct regular monitoring and measurement of the quantity and composition of substances released into the atmospheric air in accordance with the procedure established. Implementation of atmospheric air protection means should not result in pollution of other areas of nature.

In accordance with the procedure established authorities in the field of atmospheric air protection may limit, interrupt or prohibit the emission of pollutants into the air, up to the termination of the operations of individual establishments, enterprises, plants and organizations, if conditions and requirements defined by the permit have been violated as well as if a threat to the health of the population arose.

In case of exceeding the upper permissible emissions of atmospheric air pollutants due to an emergency situation or other reasons, managers of enterprises, establishments and organizations are obliged to immediately report to the authorised body in the field of atmospheric air protection and to take appropriate measures for atmospheric air protection and elimination of pollution causes and consequences in accordance with established procedure:

Manufacture and operation of vehicles and installations where the content of atmospheric air pollutants in emissions exceeds the prescribed emission standards shall be prohibited.

According to Article 21 of the Law, in the case of the placement, design, construction and commissioning of new and remodeled enterprises, structures and other facilities, upgrading of existing technological processes and equipment as well as introduction of new ones, the maintenance of normatives of harmful effects on atmospheric air and reduction of those effects shall be ensured. At the same time, the capture, utilization, neutralization of harmful substances and emissions or complete exclusion of emissions of pollutants into the atmospheric air, fulfillment of other requirements of atmospheric air protection shall be provided given that emissions from designing, operation and future construction of enterprises, entities and other facilities as well as physical harmful effects together do not lead to exceeding the upper permissible concentrations of atmospheric air pollutants and the upper permissible levels of the physical harmful effects on the atmospheric air. Proposals on the placement of new and reconstructed enterprises and structures affecting the state of atmospheric air in the territory of the RA shall be discussed in the manner established by the Government of the RA. The placement selection for all enterprises, structures and other facilities that affect the atmospheric air and their construction / reconstruction projects shall be subject to environmental expertise by the authorized authorities in the field of nature protection.

In case of placement selection for new enterprises, structures and other facilities that affect the atmospheric air, reconstruction or expansion of existing enterprises, structures and other facilities, creation of sanitary protection zones is envisaged.

In case of local selection of new enterprises, structures and other objects affecting the atmospheric air, reconstruction or expansion of existing enterprises, structures and other objects, creation of sanitary protection zones is envisaged.

Governmental Decree of RA "On approval of the upper permissible concentration of substances polluting the atmospheric air in residential areas" defines the upper permissible concentrations for each material (Appendix 1). Values of upper permissible concentrations of harmful substances in specially protected areas and touristic regions and/or centers shall be taken as 0,8 of upper permissible concentrations of the substance in question.

Governmental Decree of RA "On approval of the order of preparation and adoption of normatives for substances polluting the atmospheric air and declaring void governmental decrees of RA N 192 from 30 March 1999 and N953-N from 21 August, 2008" stipulates that normatives for the emission of harmful substances into the atmosphere are developed for those harmful substances for which there are defined health, environmental or other normatives for their content in the atmosphere. If as a result of the activities of the economic entity a material is released for which no health, environmental or other normatives are specified, then the economic entity shall apply to the Authorized Body with a request to develop a normative for the given material.

The normatives for the upper permissible emission limits for atmospheric air pollutants from stationary sources of atmospheric air pollution are developed by economic entities having such sources. The emission limits provided shall remain in force until quantitative or qualitative changes have been made in respect of stationary sources of pollution and contaminants, and no

background super-normative contamination with given substances has occurred. The emission limits associated with causes of background super-normative pollution shall be reviewed no earlier than 5 years after the date of issuance.

Information on background contamination of the site is provided by the Ministry of Environment of the RA by posting it on its official website. If data of background contamination are missing for a given area, background contamination is determined based on the population of the area in question.

The emission limits for newly constructed, expanded and reconstructed facilities shall be defined within 7 days from the date of commissioning of those facilities in the prescribed manner on the basis of design solutions for their construction, extension and reconstruction for one year. Thereafter, in relation to the emission capacity or volume, in accordance with paragraphs 2 or 3 of paragraph 2 of this Decree.

1.5.1. Upper Permissible Concentrations for Heavy Metals

6. Governmental Decree of RA "On approval of the upper permissible concentration of substances polluting the atmospheric air in residential areas" covers all atmospheric air pollutants, including heavy metal upper permissible concentrations.

1.6. Clean Development Mechanisms within the Kyoto Protocol of the Convention on Climate Change

7. Governmental Decree of RA "On implementation of programs within the Kyoto Protocol on CDMs of the UNFCCC" stipulated that the Ministry of Environment:

   a) confirms compliance of the projects implemented under the Clean Development Mechanism with the requirements of Article 12 of the Kyoto Protocol to the Framework Convention on Climate Change;

b) confirms the freewill participation of project parties in the projects under the Clean Development Mechanism;

c) ensures access to information on projects implemented under the Clean Development Mechanism in Armenia;

d) holds discussions with potential investors and develops strategic directions for implementation of projects under the Clean Development Mechanism;

e) ensures effective participation of the RA in the international processes of the Clean Development Mechanism under the Kyoto Protocol to the Framework Convention on Climate Change;

f) in accordance with the procedure established by the legislation of the RA, ensures the coordination of projects and design documents within the Clean Development Mechanism with relevant stakeholders and organizations.

1.7. Emissions to the water resources

8. Water Code of RA stipulates that any person shall secure a water use permit issued for any type of water use, except for cases defined by this Code. The emission limit values for pollutants for each water resource shall be determined on the basis of exceeding the permissible concentrations of pollutants in the catchment area and their residual permeability in the bottom sediments and reservoirs. Upper permissible outflow criteria of pollutants in wastewaters shall be determined for each water resource based on conditions of inadmissible excision accumulations of upper permissible concentration of pollutants within water intake basin and inadmissible accumulation of their residual quantities in bed sediments and water organic substances.

   The upper permissible criteria are applied to the emissions of pollutants to water resources, defined based on:

   a) upper permissible anthropogenic threshold level, the long-term impact of which will not result in change of natural properties and composition of water ecosystems beyond natural seasonal and perennial fluctuations,

   b) volume of pollutants, which reaches the water intake basin in the form of organized and unorganized outflows.

Order of the Minister of Nature Protection of RA "On approval of the methodology of calculation of permissible emissions of industrial wastewater to the water resources" defines the method of calculating the permissible outflow limit values (hereinafter referred to as POL) for effluents discharged into water resources to be included in the water use permits, as well as for hazardous substances that are contained in wastewater discharged into sewer collector and are not subject to further treatment. The POL quantities calculation is based on the presumption that the water resource should be considered as a single ecosystem capable of self-renewal.

1.8. Foul smell / Odor

9. According to Article 31 of the Law of RA "On protection of the atmospheric air", it is forbidden to transport waste heaps, ore dumps and embankments in settlements, to store industrial, commercial, municipal waste and other waste that are sources of atmospheric air pollution with dust, harmful gases and **odorous substances, as well as to burn mentioned waste in the areas of enterprises, institutions, organizations and settlements.**

1.9. Noise

10. According to Article 4 of the Law of RA "On ensuring sanitary epidemiological safety of the population of RA", sanitary rules and hygienic norms (hereinafter referred to as sanitary rules) establish standards of environmental safety and non-harmfulness for the population and requirements for ensuring favorable conditions for human life. Implementation of sanitary rules is mandatory for all government agencies, enterprises, institutions, organizations, as well as officials and citizens.

    The above regulation is of a general nature, where noise is not specifically regarded as a physical impact on the environment.

The Order of the Minister of Urban Development of RA "On approval of construction norms "HHSHN22-04-2014" protection from noise and making changes to the Order of the Minister of Urban Development N82 from 1 October, 2001" defines mandatory requirements to be followed during the design, construction and operation of various buildings and structures, during the planning and construction of settlements, in order to protect from noise as well as to provide normative parameters of acoustic environment in industrial, residential, public buildings and residential construction areas.

Although the construction norms set out by this order indirectly apply to environmental protection from noise, however, there are no targeted regulations in the RA.

1.10. Regulation of POPs

11. On May 17, 2004, the RA ratified the Stockholm Convention on "On persistent organic pollutants", the main purpose of which is to protect human health and the environment from the impacts of persistent organic pollutants. The Stockholm Convention obliges the Parties to prohibit the manufacture and use of POPs and industrial chemicals included in the list. The Parties shall take measures to reduce emissions of dioxins and other unintentionally produced POPs in order to permanently minimize emissions and, where possible, eliminate them altogether. The Parties shall also undertake measures to reduce or eliminate POPs emissions from existing POPs stocks/storage or waste.

1.11. Application of the Best Available Technologies

12. The concept of "Best Available Technologies" widely used in the EU and US is unfamiliar with the environmental legislation of the RA. Certain incidental references are found in ambient air protection legislation. In particular, the term "best available technology" in the Law of RA "On protection of the atmospheric air" is defined as manufacturing technology solutions, processes and modes based on state-of-the-art scientific advances that have proven their practical applicability and their use

promotes the saving of natural resources, prevents, and when this is not possible, reduces the harmful effects on the environment (atmosphere, water resources, land cover, biosphere). Article 15 of the Law states: "Enterprises, establishments and organizations whose activities are related to emissions of atmospheric air pollutants shall undertake technical, economic, organizational and other measures to ensure compliance with the conditions and requirements set out in the emission permits; take measures to reduce pollutant emissions; ensure good condition of environmental facilities, equipment and their continuous and effective operation; consistently improve technological processes by introducing the best available technologies." However, no legal act clarifying this provision and the procedure of its application has been adopted.

1.12. Environmental Control

13. Law of RA "On Organizing and Conducting Inspections in the Republic of Armenia" regulates organization and conducting of inspections and surveys on activities of commercial or non-commercial organizations, institutions (including foreign legal entities) registered in the RA or in foreign countries, operating in the territory of the RA, branch of legal entity or representative office of a legal entity, local self-government bodies, as well as individual entrepreneurs; defines a uniform procedure for their implementation.

Article 22 of the Law of RA "Environmental control" sets out the main areas of inspection: **atmospheric air protection, water resources use and protection, soil protection,** use and protection of fauna and flora, hazardous materials and **industrial and consumer waste, state environmental expertise,** environmental tax and nature use fees, environmental administrative statistics.

Governmental Decree of RA "On approving the general description of the risk-based inspections' methodology and risk criteria for inspections by the State Environmental Inspection of the RA Ministry of Nature Protection" enables classification

of facilities to be inspected by risk and determination of the frequency of the inspections based on it. The riskiness of facilities is determined based on the sum of the sectoral and individual risks.

1.13. Responsibility for violating environmental legislation

14. Administrative, criminal, civil liability is foreseen for the violation of the RA environmental legislation. At the same time, only individuals may be subject to criminal liability.

    Code of RA on Administrative Offenses stipulates responsibility for the violation of the Armenian environmental legislation in the form of fines. These offenses are set forth in Chapter 7 of the Code: administrative offenses in the field of land use, surveying and mapping, preservation of monuments, natural environment, history and culture.

    Article 167 of the RA Tax Code establishes a fine for exceeding the limits of harmful substances emitted from stationary sources.

    RA Criminal Code stipulates crimes against environmental safety in Chapter 27, imposing imprisonment and/or a fine.

    RA Civil Code stipulates an obligation to compensate for the damage caused by the offense.

1.14. Environmental Damage Insurance

15. The concept of environmental damage /environmental insurance does not operate in Armenia. Relevant legal act is not adopted.

2. FERTILIZERS

2.1. Charcoal as a Fertilizer

16. The charcoal obtained as a result of P&G is not regulated in the RA for use as agricultural fertilizers.

2.2. Charcoal certification

17. As the use of charcoal as an agricultural fertilizer is not regulated, the legislation does not require certification.

2.3. Charcoal labeling

18. Since the use of charcoal as an agricultural fertilizer is not regulated, the legislation does not provide requirements for the labeling of charcoal.

3. WASTE MANAGEMENT

3.1. Waste Reuse and Recycling is preferable to energy recovery by Incineration

19. According to Article 6, part 2 subpoint b) of the Law of RA "On waste", one of the main approaches of the state policy in the area of waste management is reduction of waste generation and risk level through, inter alia, complex utilization of raw material resources for reduction of waste quantity (volumes). It is obvious from this formulation that the different ways of using waste, including incineration, are not considered within a certain hierarchy, unlike the principle widely adopted in the EU legislation and practice. The phrase "complex utilization of raw material resources" does not in any way express the preference of other ways of using waste against incineration.

3.2. Municipal Solid Waste Sorting

20. The RA legislation does not stipulate a requirement for the sorting of MSW. Consequently, mixed muinicipal waste, which contain also hazardous waste, are not sorted by generators. Although Article 11 of the Law of RA "On waste" defines among the powers of local authorities that they support the introduction of a waste sorting system, that system does not work in Armenia.

    Minutes of the Meeting of the RA Government on "Strategy for development of the municipal solid waste management system for 2017-2036". The strategy is aimed at development of MSW management system in compliance with EU standards. It sets up targets to be achieved as a result of implementation of the strategy, such as 10 new landfills complying with EU environmental and sanitary standards, 95% MSW collection rate, up to 20% waste sorting rate etc. However, at the current point there are no tangible steps undertaken towards these goals. According to the point 68 of the strategy public awareness campaign shall widely focus on "reduce, reuse, recycle" principle, the Section VII on proposed changes to the legislation of RA is silent about incorporating EU waste hierarchy concept into national legislation.

    According to the «Governmental Decree "On approval of the program measures for 2019-2023 activities of the Government of RA", "Strategy on sanitation system of the Republic of Armenia" (Annex 1 Governmental Decree of the RA N650, para. 226.3) is to be elaborated by the end of August, 2019. The mentioned strategy is currently being developed; however, it is not circulated yet as the deadline has not expired.

3.3. Hazardous Waste Classifier

21. According to Order of the Minister of Nature Protection of RA N430 "On approval of the list of waste classified based on hazardousness", the waste is classified into 5 separate classes. Mixed, unclassified solid waste (9110010001004 unclassified

waste generated from permanent and temporary residential areas and 91200400 01 00 4 unclassified household waste from organizations) are considered hazardous wastes of the 4th class.

Unlike the "derived-from" rule in the United States according to which waste received in the result of hazardous waste treatment is automatically considered hazardous, this principle is not enshrined in Armenian legislation. According to the Order of the Minister of Nature Protection of RA N430 "On approval of the list of waste classified based on hazardousness", an exhaustive list of hazardous waste is defined.

3.4. Hazardous Waste Labeling

22. According to Article 4 of the Basel Convention "On the control of transboundary movements of hazardous wastes and their disposal", each Party requires that the transportation of hazardous or other waste from the starting point of transboundary transport to the country of disposal is accompanied by a document. This requirement is of a general nature and it is not clear whether the accompanying document relates to labeling. The current legislation of the RA also does not require labeling of hazardous waste.

    Order of the Minister of Health of the RA "On the approval of n2.1.3-3 sanitary rules and norms for the use of medical waste" provides for a labeling requirement only for medical waste. In particular, medical waste, with the exception of infectious microbiological waste and microbiological liquids, shall be immediately separated at the place of its generation and placed in containers specially designated for their collection and labeled "Medical Hazardous Waste".

3.5. Passport Issuing for Hazardous Waste

23. Law of RA "On waste" stipulates a requirement for waste passports. Passport issuing for hazardous waste is implemented to ensure resource saving and safe use of hazardous waste and are the basis for technological, economic, legal and other decision-

making related to waste to be passported, in particular related to implementation of requirements for environmental compliance, regulation of transboundary waste transportation, registration and/or calculation of volumes for waste disposal subject to environmental tax, as well as enforcement of appropriate sanctions for environmental offenses, taking necessary and appropriate means of using waste as a secondary raw material for production, feasibility of waste processing. In particular, **waste passport issuing** is a complex of activities aimed at waste identification based on waste passport data to ensure resource saving and safe use of waste. **Waste passport** contains information on the type, quantity, class of hazardous waste, its composition and key resource and raw material properties of the hazardous waste produced by waste generator. The hazardous waste generators shall, in accordance with the procedure established by the Government of the RA, prepare and approve the passports agreed with the authorized body in the field.

Governmental Decree of RA "On approval of the order of passportization of waste" regulates the relations of preparation, coordination and approval of hazardous waste passports (hereinafter referred to as "passports") with legal entities and individual entrepreneurs (hereinafter referred to as waste generators).

The passport shall be developed by waste generators and coordinated with the RA Ministry of Environment.

The passport shall include the following mandatory data:

a) the name of the waste;

(b) the name and details of the organization;

(c) the waste code;

d) the quantity of passported waste;

e) list of hazardous properties of waste;

f) origin of waste (according to technological regulation);

(g) the composition of the waste and the toxicity of its components;

(h) the method of waste neutralization or processing;

i) waste explosion hazard;

j) waste corrosivity;

k) waste reactivity;

l) necessary precautions for the use of waste;

m) restrictions on waste transportation;

n) additional information;

o) the statement of the waste generator.

3.6. Specific regulation of hazardous waste transportation

24. According to Article 4 part 7of the Basel Convention "On the control of transboundary movements of hazardous wastes and their disposal" each Party shall:

a) Prohibit all persons under its national jurisdiction from transporting or disposing of hazardous wastes or other wastes unless such persons are authorized or allowed to perform such types of operations;

b) Require that hazardous wastes and other wastes that are to be the subject of a transboundary movement be packaged, labelled, and transported in conformity with generally accepted and recognized international rules and standards in the field of packaging, labelling, and transport, and that due account is taken of relevant internationally recognized practices;

c) Require that hazardous wastes and other wastes be accompanied by a movement document from the point at which a transboundary movement commences to the point of disposal.

According to Article 4 part 9 of the Convention, Parties shall take the appropriate measures to ensure that the transboundary movement of hazardous wastes and other wastes only be allowed if:

a) The State of export does not have the technical capacity and the necessary facilities, capacity or suitable disposal sites in order to dispose of the wastes in question in an environmentally sound and efficient manner; or

b) The wastes in question are required as a raw material for recycling or recovery industries in the State of import; or

c) The transboundary movement in question is in accordance with other criteria to be decided by the Parties, provided those criteria do not differ from the objectives of this Convention.

For the purpose of this Convention, any transboundary movement of hazardous wastes or other wastes shall be deemed to be illegal traffic:

a) without notification pursuant to the provisions of this Convention to all States concerned; or

b) without the consent pursuant to the provisions of this Convention of a State concerned; or

c) with consent obtained from the States concerned through falsification, misrepresentation or fraud; or

d) that does not conform in a material way with the documents; or

e) that results in deliberate disposal (e.g. dumping) of hazardous wastes or other wastes in contravention of this Convention and of general principles of international law.

Law of RA "On waste" provides the legal definitions of **waste transportation** and **transboundary transportation**. In particular, **waste transportation** is transportation of waste from places of its generation or storage to sites or facilities of

processing, recycling or disposal. **Transboundary transportation of waste** is transportation of waste from the territory of one state to another or through the territory that is not under the jurisdiction of a certain state conditioned upon the fact that such a transportation is related to at least two states. Cross-border transportation of waste The transportation of waste from one State to another or within the jurisdiction of any State, provided that such transportation concerns the interests of at least two States.

Order of the Minister of Health "On approval of hygienic and epidemiological requirements N 2.1.7.001-9 for use, transportation and storage of hazardous chemical waste and hazardous chemical substances" defines the hygienic requirements for the use (prevention of waste generation, its collection, transportation, storage, processing, reprocessing, recycling, removal, neutralization and disposal) of hazardous chemical waste generated during the activities of organizations and individual entrepreneurs (hereinafter referred to as the Organization), with the exception of medical and radioactive waste, as well as for the storage and transportation of hazardous chemicals (strongly toxic chemicals), with the exception of pesticides and mineral fertilizers. The rules apply to the design, construction, reconstruction and operation of organizations involved in storage, neutralization and disposal hazardous chemical waste as well as in storage and transportation of hazardous chemicals.

Frequency of transportation of hazardous chemical waste accumulated from the territory of the organization is regulated by the upper limits of accumulation of industrial waste that is included in the organizational development plan or management plan for hazardous chemical waste.

All types of works in basic and auxiliary industrial areas associated with the loading, transportation and unloading of hazardous chemical waste shall be automated and as far as possible sealed.

The transportation of hazardous chemical waste outside the organization shall be carried out by an organization licensed in accordance with the legislation of the RA on a special vehicle equipped for this purpose. The operation and conditions of a specialized vehicle shall exclude the possibility of emergency situations, loss of waste during transportation and environmental pollution. A specialized vehicle shall have leak-proof and fully sealed containers.

3.7. Waste Storage

25. Order of the Minister of Health "On approval of hygienic and epidemiological requirements N 2.1.7.001-9 for use, transportation and storage of hazardous chemical waste and hazardous chemical substances" defines the handling of hazardous chemical waste (waste prevention, collection, transportation, storage, processing, reprocessing, recycling, removal, neutralization and disposal) generated by organizations and individual entrepreneurs (hereinafter referred to as the Organization), with the exception of medical and radioactive wastes, as well as sanitary requirements to storage and transportation of hazardous chemicals (highly toxic chemicals), except for pesticides and mineral fertilizers.

Projects and normative documents for the collection, temporary storage, neutralization, destruction and disposal of hazardous chemical waste, as well as for land allocation for hazardous chemical storage facilities, their construction and reconstruction are in advance coordinated with the RA Ministry of Heath which performs a hygienic examination and provides an expert hygienic conclusion

It is allowed to temporarily store hazardous chemical waste:

1) in the production areas of waste generating organizations - open areas or workshops, warehouses, overground and underground waste containers, carriages, tanks, etc.

2) in the areas and premises of the waste processing and neutralization organizations;

3) at the collection and reception points of secondary raw materials.

Temporary storage of hazardous chemical waste in the production area shall be provided in the following cases:

1) for the temporary storage of separated waste at the source of waste generation;

2) for the utilization (reprocessing and recycling) of waste in the subsequent technological process for neutralization;

3) in the absence of neutralization and disposal facilities, subject to the requirements of these Rules.

The collection and temporary storage of hazardous chemical waste in the production area is carried out in the workshops or in one common area allocated for all the workshops. Collection and storage conditions are defined by the class of the hazardous waste, the method of packaging (type), taking into account the state of aggregation of the waste and the reliability of the container. Collection and storage conditions are expressed in the technical regulation (organization passport, technical condition, instruction).

Temporary storage of hazardous chemical wastes of 1st and 2nd classes shall be implemented in enclosed warehouses, providing for the spatial isolation of their separate types and separate storage in individual cells, on a double basis. Storage of industrial solid wastes of 1st class is permitted exclusively in airtight containers (containers, barrels, tanks), storage of industrial solid wastes of 2nd class in safe sealed containers (in polyethylene bags, plastic containers), storage of industrial solid wastes of 3rd class in paper, cotton, yarn bags, 4th class IV in the form of stacked, collected beds. For the simultaneous storage of hazardous chemical wastes of different classes, the calculation of their upper permissible limit shall be determined by the presence and specific content of the most hazardous substances (1st and 2nd classes) and by their specific content, which shall be substantiated in the relevant technical documentation.

The maximum limit for the simultaneous storage of hazardous chemical waste in an organization shall be determined by the organization, in each specific case, on the basis of the balance of materials, inventory of the waste taking into account its macro and micro constituents, physicochemical properties, including the state of aggregation, toxicity and migration level of waste components to atmospheric air. A standard limit for the storage of hazardous chemical waste in the organization shall be the content of the specific hazardous substances in the air up to 2 m in height, which shall not be more than 30% of the upper permissible concentration determined for air in the working zone.

The limit for the storage of hazardous chemical waste in industrial areas is not regulated for hazardous waste of 1st class, condensed liquid and pasty waste stored in airtight containers and enclosed facilities, excluding access by unauthorized persons. The limit for the storage of hazardous chemical waste in industrial areas is not regulated: friable and trampled waste of 2nd and 3rd classes, which are stored safely in metal, plastic, wood and paper containers. In such cases the upper limits of the waste shall be determined taking into account the general requirements for the safety of chemicals: fire hazard, the emergence of more dangerous secondary compounds under open or semi-open conditions.

Governmental Decree of RA "On approval of the order of adoption of drafts on normatives of waste generation and disposal limits" regulates the process of approving the drafts of normatives of waste generation the limits for their disposal by legal entities and individual entrepreneurs involved in waste management. In order to ensure compliance with the requirements of environmental legislation, drafts on the normatives of waste generation and the limits for their disposal (hereinafter referred to as drafts) are approved for legal entities and individual entrepreneurs involved in waste management (hereinafter referred to as legal person and individual entrepreneur). The normative of waste generation defines the quantities of certain types of waste generated during unit production.

The limits for waste disposal is an upper permissible quantity of a certain type of waste, which may be disposed of at a waste disposal facility in accordance with the procedure established by the legislation of the RA, taking into account the environmental status of the area concerned. Waste disposal is permitted on the basis of limits approved by the RA Ministry of Environment.

Legal entities and individual entrepreneurs with hazardous waste of 1st, 2nd, 3rd and 4th class (according to the "On the classification of the waste generated in the territory of the RA according to the degree of hazardousness" instruction approved by the Minister of Nature Protection of RA) shall develop drafts and submit to the Ministry of Environment of the Republic of Armenia (hereinafter referred to as the Authorized body) for approval. The drafts shall be developed taking into account the physicochemical composition, quantity, type, degree (class) of hazardousness, the disposal sites and the occupied area (volume) thereof, as well as the waste upper permissible limit normatives for the harmful effects on the environment. The drafts shall be approved for hazardous waste that will be disposed on or off the industrial sites of the organization, depending on the methods of disposal (storage, burial).

Methods of waste storage at the industrial sites of the organization are:

a. technological stage - waste storage for future use in a given organization in accordance with the technology regulation for waste recycling (utilization);

b) accumulation - waste accumulation in order to transfer waste to other entities on a contractual basis;

c) waste storage for up to one year - waste storage in the absence of technology or contract;

d) long-term storage of waste - storage of waste for more than one year.

Order of the Minister of Nature Protection of RA "On approval of the exemplary form for calculation of waste generation normatives and drafts of their disposal limits" acts as a guide for the specified calculations.

3.8. Licensing / authorization of waste management activities

26. Article 43 part 2 of the Law of RA "On licensing" defines the types of activities subject to licensing in the RA, including the **hazardous waste management.**

Governmental Decree of RA "On approval of the licensing order of activities for use of hazardous waste in the Republic of Armenia" sets the conditions for the licensing of hazardous waste management in the Republic of Armenia. Legal entities and individual entrepreneurs have the right to obtain a license for the activities, provided for by this Procedure, unless it is prohibited by the Republic of Armenia Law on Licensing (hereinafter Law) and the statute of a legal entity or the state registration certificate of an individual entrepreneur. The procedure applies to activities related to hazardous waste, with the exception of nuclear and radioactive waste where licensing of transportation, use, processing, recycling and disposal activities is carried out by separate procedure.

The license is issued by the authorized body responsible for environmental protection (hereinafter referred to as the licensing body) based on the conclusion of the licensing committee. The license shall be issued within 23 business days after submission of the specified documents to the licensing authority.

The legal entity or individual entrepreneur (hereinafter licensee) shall have the right to engage in hazardous waste management activities in the RA if they have received a hazardous waste management license in the RA in accordance with the prescribed

forms and a license inset in accordance with the prescribed forms. The licensee may only engage in the type of activity specified in the license inset.

Supervision over compliance with the license requirements and conditions shall be carried out by the Inspectorate for Nature Protection and Mineral Resources and the Health and Labor Inspectorate, as prescribed by law. Licensees are required to submit a report on the performance of their licensed activities once every semester during the calendar year until the 15th of the month following each semester.

The licensing authority shall maintain a single electronic register of licenses (hereinafter referred to as "electronic register") which shall state:

a) the name and location of the licensed legal entity, and for the individual entrepreneur the surname, name, place of residence and registration address,

b) license series and number,

c) license date and registration number,

d) the type of activity for which a license has been granted,

e) place of business (address),

f) the timing of the action,

j) information on license renewal, suspension, termination in the electronic register,

h) other information provided by law or licensing procedure.

4. RENEWABLE ENERGY

4.1. Promoting renewable energy sources to prevent climate change

27. Article 1 of the Law of RA "On energy saving and renewable energy" defines the objectives of the law, including the reduction of the man-made impact on the environment and human health. Article 5 part 2 of the Law sets out the principles of public policy in the field of energy saving and renewable energy, ensuring the priority of efficient (saving) use of natural resources and environmental protection in development of measures energy efficiency and renewable energy.

    These formulations do not directly reflect the logic that renewable energy sources are encouraged to reduce climate change impacts. However, it shall be stated that the promotion of renewable energy is important first and foremost in terms of environmental priorities.

    The law defines the following concept of **biomass energy source:** organic and/or combustible products of human biological or economic activity and other animal origin, vegetable residues and waste, as well as agricultural crops.

4.2. Waste incineration tools are not used in the renewable energy sector if waste sorting is not implemented

28. As already mentioned, there is no waste sorting system introduced in the RA, therefore, in the field of renewable energy there is no instrumentation for economic support conditioned with implementation of the sorting requirement.

5. QUALITY OF EQUIPMENT

5.1. Equipment quality requirements

29. Law of RA "On state regulation of ensuring technical safety" defines the legal, economic, social basis for providing technical security in the RA, the system for providing technical security and regulates the relations related to providing technical security.

By law, P&G facilities are considered hazardous industrial facilities and therefore must comply with technical safety requirements. According to Article 6 of the Law, hazardous industrial facilities are considered to be manufacturing or individual sites, workshops, production sites, warehouses, installations, technological equipment or any other object where:
a) in excess of the limits approved by the Government of the RA hazardous substances are manufactured, processed, stored, transported, used or produced with following properties: combustible substances which in gaseous state, when mixed with air under normal pressure, become flammable and have a boiling temperature equal to or below 200C under normal pressure; oxidizing agents that promote combustion, cause fire or ignition of other substances due to exothermic reactions of oxide recovery; combustion materials - liquids, gases, powders that have self-igniting properties, as well as they can ignite from a fire source; explosive substances that can explode by flame impact or shocks and exhibit more sensibility to contact than dinitrobenzene; toxic substances that affecting living organisms can cause illness or death; substances that are hazardous to the natural environment, which become highly toxic in the aquatic environment properties,
b) equipment operating at a pressure of 0,07 and more mPa, water installations operating at temperatures up to 1150C (capacity of 60 kW and more) and thermal installations operating at temperatures above 1150C.

According to Article 8 of the Law, technical safety requirements are the set of norms, rules, conditions, prohibitions, restrictions, and other requirements imposed on technical hazardous industrial facilities by technical safety legislation and technical instructions and passports. Technical safety requirements shall be in accordance with the requirements of protection of the population and territories from emergencies, ensuring hygiene and sanitary-epidemic well-being of the population,

environmental protection, environmental safety, fire safety and construction norms, as well as applicable standards. Persons operating a hazardous industrial facility shall be responsible for maintaining and enforcing the requirements of technical safety legislation.

The current legislation of the Republic of Armenia does not provide for specific requirements for the quality of P&G plants and the equipment used therein, they are governed by the general rules set out below.

5.1.1. Low Voltage Equipment

30. Governmental Decree of RA "On establishing the technical regulation of low voltage equipment and declaring void Governmental Decree N150-N from 3 February, 2005" applies to new electrical equipment (electrical or electronic equipment, as well as their combinations of different purpose) of 50-1000 V alternating-current power and 75-1500 V of constant current power. The technical regulations lay down the general safety requirements for the low voltage equipment presented, the requirements for their labeling and operation documentation, the conditions for ensuring safety and the conformity assessment procedures.

According to point 6 subpoint 1 of the Regulation, **electrical equipment** is a set of machines, apparatus, installations, lines, devices and auxiliaries for the production, conversion, transmission, distribution, control and consumption of electricity, as well as other types of energy transformation, that is suitable for the application of electrical voltage of an alternating-current power of 50-1000 V and a constant current power of 75-1500 V.

The getting out of circulation of electrical equipment, including sale without conformity assessment, given in the table of this Technical Regulation in the territory of the RA is prohibited. The manufacturer or its authorized representative in the RA shall take the necessary measures to ensure that the safety equipment put in circulation is manufactured in accordance with the

requirements of this regulation and that they are not a source of danger to human and animal life and health, public property and environment as well as do not include factors leading consumers to misunderstanding about the importance and safety of electrical appliances. Electrical equipment in the territory of the RA, prior to its circulation, including its sale, must be marked with the national «ՀՏԿ» mark («Հայաստանի տեխնիկական կանոնակարգ», "Technical Regulation of Armenia") of conformity, approved by the RA Government Decree N 337-N of March 14, 2013, which certifies the conformity of electrical equipment with this technical regulation requirements.

The manufacturer shall develop the necessary technical documentation and he or his authorized representative in the RA shall keep those documents for at least 10 years, after production of the last electrical equipment, for the purpose of control by public authorities.

5.1.2. Electrical Magnetic Compatibility

31. Governmental Decree of RA "On approval of technical regulation on electrical magnetic compatibility" applies to technical means intended for putting circulation and may cause electrical magnetic disturbances, the operation of which may be sensitive to external electrical magnetic disturbances. The technical regulation sets out the requirements, including necessary standards (Chapter VII) for electrical magnetic compatibility with respect to preventing damage to human life and health, legal entities and individual entrepreneurs, and public property and the environment caused by the impact of electrical magnetic disturbances.

5.1.3. Automated Equipment

32. Governmental Decree of RA "On approval of technical regulation of the safety of machines and mechanisms" applies to the machines and mechanisms and their essential components designated for production of various objects and their components, as well as processing, transportation and packaging of materials. The technical regulations lay down the general safety

requirements for machines and mechanisms and their essential components (hereinafter referred to as "machines and mechanisms"), additional requirements for certain categories of machines and mechanisms, requirements for the neutralization of certain risks arising from the mobility of machines and mechanisms and from lifting operations, including requirements for their labeling, service, contents of the operating instructions. Technical regulation does not apply to steam boilers, pressure vessels and cylinders.

5.1.4. Equipment used in Explosive Environment

33. Technical Regulation of the Customs Union "On safety of equipment envisaged for work in explosive environment" applies to electrical equipment, including Ex-components and non-electrical equipment designed to operate in an explosive environment.

According to the technical regulations, depending on the risk of becoming a source of ignition and the conditions for their use in explosive environments, the equipment is classified according to the levels of explosive protection:
- "highly explosive safe",
- "explosive safe",
- "high reliability against explosion".

According to Article 4 of the technical regulation, the requirements for explosive safety are:
1. Equipment for work in explosive environments shall meet the requirements for safe operation and operation under the explosion risk;
- by preventing formation of an explosive environment that may arise from the release of flammable materials from equipment,
- by preventing ignition of an explosive environment, taking into account the nature of any source of the explosion,
- according to Annex I, in accordance with the field of application, level and types of explosion protection.

2. Explosion protection of the equipment must be provided within the normal operating modes and within the deviations set out in the manufacturer's technical documentation, taking into account the conditions of use.

3. Equipment for work in explosive environments shall be designed and manufactured in such a way that after meeting requirements for their intended use and installation, operation (use), transportation, maintenance and repair, the following safety and security requirements shall be fulfilled: .

- equipment must be provided with explosive safety throughout the intended service life,
- the equipment must be operated in actual or predicted environmental conditions,
- the equipment must maintain explosion safety in changing environmental conditions and in the event of external influences (humidity, vibration, contamination, thunderstorms and surge voltage, etc.), taking into account the limitations set by the manufacturer.

Equipment parts shall be designed for mechanical and thermal impacts and shall withstand the effects of existing and supposed aggressive materials.

- if the equipment contains parts that may be a source of ignition, they must be opened in switched off mode or contain only thunderbolt safe chains or have personnel protection and warning signs,
- in the case of accumulators, if there is any electrical charge (condensers) and heated elements which may be a source of ignition, the membranes shall be opened at a time sufficient to allow the built-in capacitors to discharge safely residual energy or the temperature of the heated elements to lower the maximum surface temperature or temperature range specified on the equipment.

If after disconnection of the equipment in case of explosion-proof explosion-proof equipment with protective gas cleaning, there is a need for continuation of cleaning by the protective gas until discharge of the built-in capacitors or reduction of the temperature of the heated elements up to the above values, then the manufacturer must place a warning note on the opening parts of the equipment:

- The surface temperature of the equipment and/or parts of the "highly explosive safe" ("very high") and "explosive safe" ("high") shall be at a temperature below the self-ignition temperature of the explosive gaseous environment or the self-ignition temperature of dust layer in the event of changes in operating conditions (within the limits of the manufacturer's technical specifications) and environmental conditions.

During operation (within the limits specified in the manufacturer's technical documentation), the temperature below the self-ignition of an explosive environment shall be allowed only if the manufacturer has taken additional measures to protect the mentioned equipment.

Temperature rise due to external sources of heat and chemical reactions should be considered.

- the surface temperature of the equipment at the level of "high degree of explosion protection" ("high degree") shall not be higher than the maximum surface temperature in the normal mode of operation. The design of such equipment shall not have any parts which may cause ignition in the surrounding explosive environment.
- Group 1 equipment must be dustproof and capable of preventing ignition of carbon dust,
- Dust (taking into account the amount of its elements) in equipment of group 2, including cable and joint connectors shall not cause explosive mixtures with air or dangerous accumulations within the equipment,
- Equipment capable of discharging flammable gases or dust must have a closed structure.

The holes in the equipment or non-sealant joints shall be designed in such a way that the resulting gases or dust are extinguished from the outside equipment of an explosive environment. The holes through which the materials are imported or removed must be designed and equipped in such a way as to limit the flow of flammable materials during filling or emptying.

- Equipment intended for use on dusty objects and / or their parts shall be designed so that dust accumulated on their surface does not ignite. Dust residues should be restricted to the cleaning of the surfaces, the frequency of which is indicated in the operating manual. The surface temperature of the parts of the equipment shall be below the level of self-ignition of the dust layer. Besides, measures should be taken to limit the surface temperature of the equipment parts to prevent hazardous condensation depending on the thickness of the accumulated dust layer.
- safe manual shutdown of equipment involved in automatic processes should be designed in the event of a breach of the operating modes specified in the manufacturer's technical documentation, if this does not adversely affect the safety.
- in case of emergency shutdown of the equipment, the accumulated energy should be scattered to a safe value within the time indicated on the warning signs located on the opening lids.
- equipment must be upgraded with appropriate injectors, and if the equipment is intended to be used in combination with other equipment, their connections must be secure.
- in case the equipment has a detection or warning device to control an explosive environment, the locations and conditions of their installation shall be specified in the manufacturer's technical documentation.
- equipment must not contain materials from which explosive materials could be emitted.
- In the framework of the working conditions specified in the manufacturer's technical documentation, the possibility of chemical reactions between the used materials and items, which constitute a potentially explosive environment adversely affecting explosion protection, should be excluded.
- the equipment must not contain materials which, in the event of changes in their characteristics driven by environmental and operating conditions, or in combination with other materials, reduce the level of explosive resistance of the equipment.

- E_X components mounted to equipment or used for replacing equipment elements and protection systems must be operated in a safe manner in accordance with the requirements of the explosion protection when installing them in accordance with the manufacturer's operating (application) manual.
- the equipment which may be exposed to external influences must be provided with additional protection. Equipment must withstand external impacts without disturbing their explosives.
- if the equipment is in a case or in a closed container, which is a part of an explosion protection, such a case or container shall be opened only by means of a special tool or special protective measures.
- To avoid dangerous overloading of equipment, use of measurement, regulating and checking equipment shall be considered.

4 . Equipment construction must provide protection against the following potential sources of ignition:
- sparkles, flames, high temperatures of heated surfaces, electromagnetic, ultrasonic, optical ionizing radiation,
- static electricity,
- wandering and loss currents, which can lead to dangerous degradation, sparks, or surface warming and thus create a possibility for ignition.
- overheating resulting from contact or shock, which may occur between materials and parts that are touching each other during rotation or penetration of extraneous objects;
- pressure balancing performed by means of regulating devices and may cause shock waves leading to ignition or compressions,
- lightning strikes;
- exothermic reactions, including self-ignition of the powder layer.

Furthermore, all risk factors for the explosion must be taken into account and sources of explosive environment exclusion identified. Taking into account the assessment of the hazard factors, explosion protection devices must be selected for their use in explosive environments.

5 . Devices that provide protection for equipment in the event of an emergency must meet the following requirements:

- Protective devices must be operated independent from any measuring or checking equipment required for operation. The failure of the protective device must be detected with the help of technical means specified in the technical documentation;
- Preventive shutdown must immediately lead to the launch of the appropriate management devices without any intermediate instructions for the operating system;
- Emergency means for the management of protective equipment must be fitted with locking mechanisms or other devices. The new startup command can be executed and normal operation can only be restored after the special reboot of the locks;
- the used control devices and controls shall be designed in a way to ensure the safety of operation against explosion risk, at a maximum possible level;
- measuring devices must be designed and manufactured taking into account the operating requirements and conditions for their use in explosive environments, and the requirements for ensuring uniformity in measurement;
- the accuracy of indicators and the operation of measuring devices must be ensured;
- the emergency limit of a potential source of ignition of measuring equipment shall be below the threshold conditions for the explosion to occur and / or recorded in the explosive environment, taking into account the safety coefficient, operating conditions and measurement system faults specified in the technical documentation;
- the operating system of these equipment should take into account the risks of errors in the software.

6 . When supplying the equipment to the consumer, it shall be accompanied by the manufacturer's technical documentation, which shall include:

- the name and (or) designation of the equipment, its safety-related parameters and characteristics, the manufacturer's name and / or trademark;
- information on its application;
- instructions for its installation, assembling, set-up or adjustments;

- instructions on the use and safety of equipment that must be maintained during operation;
- assigned service life indicators and / or assigned resource;
- a list of critical failures, personnel errors that may result in equipment switch to emergency modes, and actions to prevent such errors;
- the parameters of the marginal conditions;
- information on the measures to be taken in the event of malfunction of such equipment;
- information on the need for additional kits with additional add-ons;
- the requirements for the maintenance of the technical characteristics of the equipment which define their explosive safety;
- requirements for packaging, conservation, transport and storage conditions, prescribed preservation times, instructions on condition reassessment, adjustment of individual elements, items, regulatory deadlines for the replacement of the nodes with expired shelf life;
- requirements for equipment utilization;
- the rules and conditions for storage, transportation and sale;
- staff requirements;
- the name and location of the manufacturer, contact information,

- the name and location of the manufacturer's authorized person, importer, and their contact information,
- date of production;

Technical documents are made up of paper drives. A set of additional package of technical documentation on electronic drives may be attached to it.

7. Equipment must include a label, which includes:
- the name of the manufacturer or his registered trademark,
- indication about the type of equipment,
- factory number,
- the number of Certificate of Conformity,
- explosion protection label,
- image of a special explosion safety sign.

8. The labeling and the manufacturer's technical documentation must be written in Russian and in the official language of the Member State of the Customs Union in case there are relevant requirements in the legislation of the Member State of the Customs Union exist.

9. The label shall be installed on the surface or placard of this equipment which is available for visual inspection without disassembling or use of tools, and shall be kept for the entire service life of the equipment.

10. By the decision of manufacturer or in accordance with the contract of supply, the label of the equipment may include additional information that is relevant for its safe use.

Pursuant to Article 5 of the Technical Regulation, the conformity of the equipment with the requirements of this Regulation of the Customs Union shall be ensured by the direct application of its safety requirements or by intergovernmental standards, and in case such are absent, by voluntary compliance with the requirements of the national standards of the Member States of the Customs Union, the application of which, on a voluntary basis, ensures compliance with the requirements of this Technical Regulation of the Customs Union and with the requirements of standards which include rules and methods for research and measurement.

Equipment conforming to the safety requirements of this Technical Regulation shall bear a unified marking of products circulating in the market in the Member States of the Customs Union.

5.1.5. Pressure Equipment

34. There is no legal regulation on the quality and safety requirements of pressure equipment in the RA.

5.1.6. Noise from the Equipment

35. According to Article 4 of the Law of RA "On ensuring sanitary epidemiological safety of the population of RA", the sanitary rules and hygienic norms define the standards of safety and non-harmfulness of the environment for the population and the requirements for ensuring favorable conditions for human life. Implementation of sanitary rules is mandatory for all government agencies, enterprises, institutions, organizations, as well as officials and citizens. In principle, these legislative formulations also cover noise regulation.

The Order of the Minister of Health "On Approval of the sanitary norms N2-III-11.3 "Noise in workplaces, residential and public buildings and residential construction sites "" Noise in Workplaces, Residential and Public Buildings and Residential

Buildings" specifies noise classification, regulated parameters and permissible noise levels in workplaces, residential, public buildings and residential construction sites. Sanitary norms are mandatory for all legal entities and individuals of the RA.

Noise at the workplace is measured 1 m away from noise source devices and equipment, 2 m away from building restraint structures, and 1.2–1.5 m above the floor. If the room surface is small and does not meet the above measurement conditions, then the noise measurement shall be performed in the center of the room.

Table 1 of this Order **lists the permissible noise levels in the workplaces of different categories of stress and severity and the noise levels in dBA. In Table 2 the permissible noise pressure marginal levels, noise levels, and equivalent levels for the most typical types of workplaces and working operations are presented.**

5.2. The equipment manufacturer must also provide a manual for exploitation

36. According to Article 16 of the RA Law "On standardization", the application of standardization documents is determined by the legal entities and individual entrepreneurs at the stages of product development, production, sale, use (storage), storage, transportation, recycling, as well as execution of works and services. : The application of national standards is voluntary. However, the application of the standard becomes mandatory:

- for all economic operators, if required by technical regulations;
- for the product (work, service) manufacturer (performer, provider), in case reference is made to the standards in the documentation of conformity (certification or declaration) of the product (work, service) or in the product label and (or) in exploitation manual.

Governmental Decree of RA "On approval of technical regulation of the safety of machines and mechanisms" specifically

regulates the operating instructions of the machines and mechanisms. In particular, according to paragraph 64 of this Decree, all machines and mechanisms shall be accompanied by an information leaflet, together with the operating instructions, which shall contain at least the following information:

- the repetition of information contained in the label of a machine or mechanism without the batch number, as well as any additional information that would facilitate ongoing maintenance (e.g. location of the importer and repair company, etc.);
- the manufacturer's intended use of a machine or mechanism in accordance with its intended purpose;
- launchers' operating locations;
- safety equipment instruction;
- launch;
- use;
- the mode of handling of the machine or mechanism, the indication of the mass of the machine and its various parts where they are usually moved separately;
- assembly, dismantling, adjustment;
- ongoing maintenance;
- teaching instruction where necessary;
- the basic characteristics of the tools mounted on machines and mechanisms where necessary.

Where necessary, special attention should be paid to the unauthorized use of machines and mechanisms in operating instructions.

Operating instructions must be set up by the manufacturer or his authorized representative. At the time of commissioning, all machines and mechanisms must be accompanied with operating instructions in original language and, in the RA, with its Armenian translation. Such translation shall be carried out in the manner prescribed by the legislation of the RA.

Operating instructions should include images, drawings and diagrams, as well as necessary instructions, especially on technical safety, for the operation, routine maintenance, monitoring, operation accuracy measurement and, when necessary, repair of the machines or mechanisms.
Any literature describing machines and mechanisms should not go in conflict with operating instructions, especially regarding the safety equipment.

The technical documentation for the machines and mechanisms shall contain the requirements for the noise generated by them and also for vibration caused by manually operated equipment. Operating instructions for noise and vibration reduction, if necessary, should include requirements for collection, operation and adjustment (e.g. use of mufflers, base mass and type).

Operating Instructions should contain the following information on the acoustic noise levels (actual size or magnitude determined by measurements on identical equipment) of machines and mechanisms:
(a) an equivalent constant amplitude sound pressure level in the workplace where it exceeds 70 dB(A), and where this level does not exceed 70 dB(A), that fact shall be stated;
(b) adjusted instantaneous peak sound pressure at the workplace where it exceeds 63 Pa (130 dB compared to 20 mPa);
(c) sound power levels generated by machines and mechanisms where the equivalent sound pressure level exceeds 85 dB(A) level in identified places.

If the manufacturer ensures the machinery and mechanisms to be operated in a potentially explosive environment, all necessary information must be included in the operating instructions.

Where machines and mechanisms are intended for non-specialist users, the operating instructions shall be consistent with the educational level of the users and be comprehensible by them.

5.3. Control

37. The Governmental Decree "On approval of the risk-based inspection checklists in the scope activities of Fire and Technical Safety Inspectorate of the Ministry of Emergency Situations of the RA" stipulates the necessary fire and technical safety checklists where the risk of hazardous manufacturing facilities is determined by the sum of the individual and sectorial risks.

The Governmental Decree of RA "On approval of the order of conducting technical safety expertize" defines the basic requirements for the procedures for conducting technical safety examination (hereinafter referred to as "expertise") of hazardous industrial facilities (hereinafter referred to as "HIF"). The main purpose of the expertise is to examine and make conclusions on the construction, extension, reconstruction, technical upgrading, conservation, dismantling design documentations, technical safety certificate, the operating (or subject to operation) buildings, compliance with technical requirements in the field of technical safety legislation of HIF.
After being registered in the Registry of hazardous production facilities, the operating HIOs are subject to expertise.

Prior to drawing up an expert conclusion, a plan of measures for the elimination of the identified deficiencies may be drawn up between the expert and the operator of the HIF during the expertise, unless the deficiencies revealed in essence do not pose a threat of technogenic accident at the given moment.

The expert opinion shall be drawn up at the end of the period specified in the action plan, after the fact of elimination of the deficiencies specified in the action plan recorded by the expert.

In case of any deficiencies in the risk of a technogenic accident during the expertise, the expert shall immediately draw up an expert conclusion on non-compliance, indicating the violations, their nature and extent of the threat.

After the conclusion of the expert opinion, it shall be signed by the expert who carried out the expertise and approved by the head of the expert organization.

Implementation of the expertise is considered completed from the moment of drawing up the expert conclusion and providing it to the HIF operator.

The expert opinion should include:

a. List of documents that served basis for the expertise and their brief description;

b. By whom and in what terms the expertise has been carried out;

c. Name and location of HIF.

d. Information on the action plan and implementation process during the expertise;

e Data on documents relating to the safe operation of the HIF (projects, licenses, contracts, certificates, acts, etc.);

e. Information, analysis, conclusions characterizing the state of the technical means and technological equipment used in the HIF.

f. Information on HIF's engineering and technical staff training.

The expert organization shall submit one copy of its expert opinion to the authorized body within three days after being approved in the prescribed manner, and in the event of an accidental threat, immediately, in order to forbid further operation of the HIF by warrant.

6. DESIGN / CONSTRUCTION / OPERATION

6.1. Licensing

38. Governmental Decree of RA "On approval of the licensing order of activities for use of hazardous waste in the Republic of Armenia" regulates the terms and conditions of licensing of hazardous waste activities in the RA. Without the license for the use of hazardous waste in the RA issued by the current procedure, carrying out such activity shall entail liability provided by law.

6.2. Permission

39. The Governmental Decree of RA "On approval of the order of granting building permits in the RA and declaring void several governmental decrees" regulates relations regarding the issuance of permits and other documents for the construction of residential, public, industrial objects and their complexes in the RA.

    Permits and other documentation for construction are provided in the following stages: design permit (or architectural design assignment), construction permit, and completion act (or operation permit), unless otherwise provided in this procedure. Procedures for issuing permits and other documents for construction and related functions vary depending on the degree of risk of the object in accordance with the requirements set forth by this procedure.

6.3. EIA/EIE

40. See paragraph 3 of this study for the reference.

6.3.1. Installation

41. Article 7 of the RA Law "On Environmental impact assessment and expertise" sets out the scope of issues that should be addressed during the assessment and expertise. These issues are usually related to the location of the intended business activity. During the evaluation and expertise, the following are considered:

- qualitative and quantitative indices of atmospheric air, pollutants in the atmosphere, the level of pollution;
- surface and groundwater, their category, flow regime, qualitative and quantitative indicators, water use, drainage, water system or separate parts thereof and other characteristics;
- soil - soil purpose, type, operational purpose, grade, quality, condition, composition, contamination, degradation, use of fertile layer, other soil characteristics;
- geological structure, formations, minerals, other characteristics related to the preservation and use of the subsoil;
- terrain, landscape, specially protected nature areas, green areas of habitats, migration zones and paths;
- the flora and fauna, their species composition and conditions of existence, the use of flora and fauna objects, the use of living modified organisms, the presence of animals or plants recorded in the Red Data Book of plants or Red Data Book of animals of the RA;
- forests - operational purpose, species composition, condition and other characteristics of the forest;
- structures, historical and cultural monuments;
- composition of waste, degree of hazard, volume, use, recycling, transportation, neutralization, storage, burial, storage and maintenance;
- physical effects: noise, vibration, ionizing and non-ionizing radiation;
- health-related factors of impact;
- social factors, demographic composition and population;

- the likelihood of emergencies.

In addition to the above listed general conditions, there are certain restrictions on the conduct of economic activities in specially protected nature areas as well as in the Sevan lake area.

Article 16 of the RA Law "On specially protected natural areas" prohibits the production, use and storage of radioactive materials and wastes, as well as other hazardous or toxic substances for human health and the environment in the area of state reserve. The same prohibition also applies in the economic zones of state sanctuaries and national parks.
According to Article 10 of the Law of RA "On the Lake Sevan" any activity that has a deleterious impact on Lake Sevan ecosystem is prohibited in the zones of central, immediate and indirect impact. In particular, the production, use, storage, and disposal of radioactive materials and waste, as well as other substances hazardous or toxic for human health and the environment, are prohibited in the immediate zone of impact.

6.3.2. Buffer / Sanitary Zones

42. Pursuant to Article 13 (3) of the Land Code of the RA, the lands removed from economic circulation in accordance with sanitary or conservation requirements, shall be provided to legal entities and institutions whose activities require the establishment of sanitary zones, or those lands are classified as reserve fund lands.

According to paragraph 14 of Annex 3 of the Governmental Decree of RA N625 "On Approval of the order of preparing and adopting of land use plans", the graphical parts of the plan shall also show the boundaries of urban planning facilities of specific regulation, engineering and geological preparation of the site, the boundaries of engineering protection zones against natural and technogenic hazardous phenomena, seismic protection, agricultural and other restrictions on land use, **boundaries**

of sanitary zones, boundaries of areas envisaging special settlement provisions, directions of use of state and community owned lands, order and volumes of their allocation.

There are no clear standards for the definition of sanitary zones for certain industrial objects in the RA;

6.3.3. Construction / Building

43. See paragraph 3 of this study for the reference.

6.3.4. Thermal Efficiency Index

44. The RA Law "On Environmental impact assessment and expertise" does not clearly regulate the issue of thermal efficiency for the types of activities planned, but the economic feasibility of the activity is considered as a key issue. In particular, according to Article 17 (2) of the Law, an ecological and economic analysis of the alternatives to the proposed activity and justification for the selection of the preferred options is being carried out at the impact assessment stage. Accordingly, the environmental and human health impact assessment report shall include, as a result of the analysis of all possible options, the justification of the selected option in terms of environmental protection, and from economic and social points of view.

6.3.5. Waste Management Plan

45. A Waste Management Plan, as a required separate document, is not clearly defined by the RA legislation, although the environmental impact assessment report should include information about waste management. However, in practice, entrepreneurs by own initiative compose such documents to enhance the efficiency of waste management in the organization.

6.3.6. Public Participation

46. According to Article 26 of the RA Law "On Environmental Impact Assessment and Expertise", the processes of assessments and expertise are subject to public notice and discussion to ensure public awareness and participation. The content of the notice contains the details of the undertaker, a brief description of the founding document or intended activity, the place of implementation, the place for acquaintance and discussion, the terms, conditions for submitting comments and suggestions and other information. The undertaker and the authorized body should take into account all substantiated observations and recommendations of the public . In case of failure to do so, justified reasons shall be provided.

    The Governmental Decree of RA N1325 "On Approval of the order of public notice and implementation of public discussions", regulates the relationship between the implementation of the fundamental document on environmental impact assessment and all categories of planned activities, including public notification of environmental impact assessment and expertise, discussions and hearings (hereinafter referred to as discussions). According to the procedure, at least 4 public discussions should be held during the assessment and expertise stages.

6.4. Noise

47. The Order of the Minister of Health "On Approval of the sanitary norms N2-III-11.3 "Noise in workplace, residential and public buildings and residential construction sites" defines noise classification, target parameters and permissible noise levels in workplaces, residential and public buildings. Sanitary norms are mandatory for all legal entities and individuals of the RA. Compliance with the requirements of sanitary rules shall be taken into account in national standards and during the development of regulatory and technical documents of requirements for construction, structural, technological certification and operation of **manufacturing facilities**, residential, public buildings, technological, engineering, sanitary-technical equipment and machinery, vehicles and home appliances.

6.4.1. Noise from Transportation

48. According to Article 7 of the Convention on Road Traffic, drivers should try to ensure that their vehicles do not cause inconveniences to road users and people living on the roadside, in particular by creating excessive noise, raising dust and emitting exhaust gases. If possible, the vehicle's mechanisms and accessories should not present a risk of fire or explosion. They should also not emit excessive amounts of harmful gases, heavy smoke, foul odors, or **cause noise.**

    In fact, these provisions of the Convention need to be clarified by national law. The traffic noise from vehicles currently is not regulated in RA.

6.4.2. From Machines and Mechanisms

49. Governmental Decree of RA "On approval of technical regulation of the safety of machines and mechanisms". According to paragraph 47, machines and mechanisms must be designed and manufactured so that the risks arising from noise can be reduced to the minimum level, taking into account technical progress and the availability of noise abatement measures, particularly at the point of origin. The technical documentation for the machines and mechanisms shall contain requirements for the noise emitting from them. Operating instructions for noise and vibration reduction, if necessary, should include requirements for collection, operation and adjustment (e.g. use of mufflers, base mass and type).

    Operating Instructions should contain the following information on the acoustic noise levels (actual size or magnitude determined by measurements on identical equipment) of machines and mechanisms:

    (a) an equivalent constant amplitude sound pressure level in the workplace where it exceeds 70 dB(A), and where this level does not exceed 70 dB(A), that fact shall be stated;

    (b) adjusted instantaneous peak sound pressure at the workplace where it exceeds 63 Pa (130 dB compared to 20 mPa);

    (c) sound power levels generated by machines and mechanisms where the equivalent sound pressure level exceeds 85 dB(A) level in identified places.

In the case of large machines and mechanisms, equivalent levels of constant sound pressure in certain places, around machines or mechanisms, may be indicated instead of the sound power level. In places where international harmonized standards are not applied, the sound level shall be measured by the most appropriate test methods for those machines and mechanisms. The manufacturer shall indicate the operating conditions and methods of measurement of the machines or mechanisms used during measurement. If the operating locations are not provided or cannot be provided in the operating instructions, the sound pressure level shall be measured 1 meter away from the surface of the machines or mechanisms and 1.6 meters above the floor or platform where the workstation is located.

6.4.3. From Air Conditioners, Air Purification and Ventilation Systems

50. According to paragraph 18 of the Order of the Minister of Health of the RA "On Approval of the N 2.1.7.017-14 sanitary rules and norms for sanitary epidemiological and hygienic requirements for equipment and materials for air preparation, filtration and purification", air conditioners and air purifiers are subject to testing for any physical factors, including noise levels. Table 2 lists the basic requirements for the product(s) under control and its safety indicators.

6.4.4. From Steam Turbines

51. According to paragraph 100 of the Governmental Decree of RA "On approval of technical regulation on the operation of power plants and networks", in order to ensure operation and proper sanitary-technical condition of the premises, buildings and structures of the energy facilities, the noise emitters of exhaust pipelines, as well as other equipment and structures designed to block noise sources and to reduce its levels to the permitted norms, must be performed and maintained in good condition.
    This regulation, in fact, cannot automatically be applied to P&G plants. However, based on the rules for steam turbines, it is possible to develop noise indicators for steam turbines of P&G plants.

6.5. Certification / Conformity Assessment

52. According to the RA Law “On technical regulation”, the **certificate of conformity** is a document issued by a conformity assessment body that certifies (states) the conformity of products, persons and management systems with the requirements of technical regulations and / or standardization documents.
    There is no clear requirement for certification for P&G plants, as well as related works implementation in the RA.

6.6. Real-time monitoring of emissions

53. Real-time emission monitoring requirements in the RA are not yet introduced.

6.7. Control

54. According to Article 28.3 of the Law of RA “On technical regulation”, an official of the supervisory authority shall, on the basis of an audit act, within its competence, give instructions (orders) to the economic operator on the elimination of violations and deficiencies identified by law, setting deadlines for their elimination.
    In regards to environmental control the legal acts referred to in line 13 are applied.

    According to paragraph 5 of Governmental Decree of RA “On establishing the order of state control over urban development activities in the Republic of Armenia” “all stages of urban development - implementation of the requirements of urban planning documents, notification of planned changes in the activity environment, provision of architectural-planning tasks and technical design conditions to developers, coordination of architectural and construction projects, expertise and confirmation, construction (demolition) permits, construction implementation, Copyright and technical quality control, the design of the final act of the construction and operation of buildings and structures, all are subject to state control". Moreover, paragraph 7 states:

"State control of urban development activities shall be carried out through planned, ongoing and on demand inspections." The inspections are carried out by the Urban development, technical and fire safety Inspectorate under the RA Government.

7. OCCUPATIONAL HEALTH AND SAFETY

7.1. Occupational Health and Safety Legislation

55. The Labor Code of the RA stipulates that the safety and health of workers is the system of protection of workers' lives and health during work, which includes legal, socio-economic, organizational-technical, sanitary, hygienic, medical preventive, rehabilitation and other measures.

At work, appropriate, safe, and harmful health conditions must be established for each employee. The employer must ensure the safety and health of workers. Given the degree of hazardous production for employees, the employer engages a qualified healthcare service provider to ensure the safety and health of workers in the organization or performs this function by its own. The classification of working conditions and the permissible minimum level and quantity of factors harmful to health shall be established by laws and other legal acts.

The employer is obliged to ensure normal working conditions so that employees can comply with the employment norms. Such conditions are:

1) the proper state of the machinery, equipment and other means of work;
2) provision of technical documentation in a timely manner;
3) proper quality and timely delivery of materials and tools needed for the job;
4) provision of production with electricity, gas and other types of energy;

5) safe and harmless working conditions for health (compliance with safety equipment rules and regulations, adequate lighting, heating, ventilation, noise, radiation, vibration and other hazardous factors having an adverse effect on employee health);
6) other conditions necessary for certain works.

Each employee's workplace and environment must be secure, comfortable and safe for health, furnished in accordance with the requirements of the statutory health and safety regulations. New and reconstructed facilities (complexes, enterprises, factories, workshops, etc.) shall be put into operation in accordance with the procedure established by the Government of the RA.

Only technically-capable means of work that comply with the requirements of the statutory safety and health regulations are permitted at work. Mandatory safety and health requirements for the production of various means of work and their conformity assessment procedures are set out in technical regulations (standards) and other normative legal acts.
Safety requirements for the use of a particular means of work are set out in the documentation accompanying the means of work. These documents must be provided by the producer of the means of work while supplying it. Mandatory permanent control over the safe operation of equipment shall be exercised by the employer, unless otherwise provided by the contract for the use (operation) of such equipment.

In organizations where hazardous chemicals are used, manufactured, transported or stored during the manufacturing process, employers determine and take appropriate measures to ensure the health of workers and the protection of the environment. The packaging of hazardous chemicals shall be labeled with a warning sign of harm or danger. . Workplaces shall be equipped with collective protection means, special systems for the quantification of hazardous chemicals, and hazard warning systems for workers. Workers must be provided with individual protection means.

The employer is obliged to adopt internal legal acts on safety and health protection of employees. Failure to comply with the requirements of the legal acts, the rules and instructions of organization and implementation of work, regarding safety and health protection of workers, shall be considered a violation of the internal disciplinary rules of the organization.

Workers under eighteen years of age are required to undergo a medical examination at the time of hiring and with regular intervals up to eighteen years old. Regular medical examination of employees under eighteen years of age shall be carried out at the expense of the employer.

Employees who may be exposed to occupational risk factors in the workplace are required to undergo a medical examination in accordance with the employer-approved schedule prior to their employment and in a periodical manner. Employees whose occupational risk is attributable to the use of hazardous substances during work are subject to regular medical examination in the event of a change of workplace or work in the same organization.

Employees who work at night or by shifts must undergo a medical examination in accordance with the employer-approved schedule before hiring, and periodically during work span. The employer must approve the list of employees who are subject to mandatory medical examination and agree on a schedule for medical examination with the health control organization. Employees are provided with the timetable for medical examination via signature. Compulsory medical examinations are carried out during working hours and at the expense of the employer.

Work is temporarily suspended if:

- the employee did not get acquainted with the rules of safe work performance;
- a malfunction or emergency situation has occurred;
- the work is performed in violation of the established technological regulations;

- employees are not provided with collective and / or individual protection means;
- The workplace is dangerous or harmful to life and health.

In case of danger in the organization or subdivisions of the organization, the employer is obliged to:
- to inform all workers and persons who may be in danger as soon as possible, as well as about the measures to be taken to ensure the safety and health of workers and the actions to be taken by workers;
- take measures to stop the work and instruct workers to leave the work area and move to a safe place;
- to organize the provision of first aid to the victims and the evacuation of workers;
- immediately inform relevant internal and external services and bodies of danger and affected workers;
- Engage the organization's security and health service staff, as well as relevant trained staff, in eliminating the danger, prior to the arrival of specialized services.

Employees are obliged to notify the employer immediately of a malfunctioning of work equipment or an accident.

Every organization is required to have an employee evacuation plan.

Organizations where hazardous substances are produced, used, stored, are required to have a plan of action on warning of a potential accident and elimination of the consequences in accordance with the legislation. Employee evacuation plans should be posted in visible places. The organization's safety and health service and trade unions are required to be informed of evacuation, accident warning and elimination plans.

In accordance with the norms established by the normative legal acts on safety and health of workers of the organization, sanitary and personal hygiene rooms or separate rooms with bathrooms, showers and toilets shall be furnished for the purposes of resting, breastfeeding, changing clothes, keeping clothes, shoes and individual protection means.

In an organization where hazardous materials are used, sanitary and personal hygiene rooms shall be furnished with special requirements for the furnishing of such rooms. Requirements for furnishing the rooms of sanitary and personal hygiene are laid down in normative legal acts on the safety and health of workers, taking into account the nature of the work, the materials used and the number of employees.

The aid stations, dining rooms of the organization are furnished in accordance with the requirements of furnishing such rooms, taking into account the number of employees.

An employer may not require an employee to perform work responsibilities unless he or she has undergone occupational safety training and/or instruction. The employer ensures that the employee enrolled in the organization will perform his/her job duties only after being informed of the potential risk factors within the organization and following a safety instruction in a particular place of work.

On the basis of normative legal acts on safety and health protection of employees and the assessment of safety and health status of employees in the organization, the employer sets collective protection means and provides employees with free individual protection means. If collective protection means do not provide workers with protection from risk factors, workers should be provided with individual protection means. Individual protection means must be adapted for work, suitable for use,

and pose no additional hazards to employee safety. Requirements for the design of personal protective equipment and for the assessment of the conformity of production are laid down in normative legal acts on the safety and health of workers.

In the event of workplace accidents or acute illnesses, the employer must provide workers with first aid. The transfer of an employee who is sick or injured at the workplace to a healthcare organization is organized by the employer at its own expense.

It is prohibited to involve persons under eighteen years of age in heavy, harmful, particularly heavy, particularly harmful activities, as well as in other cases prescribed by law. It is forbidden to involve pregnant women or women taking care of children under one year of age in heavy, harmful, particularly heavy, particularly harmful activities.

A service investigation is conducted to find out the causes of occupational diseases and accidents in the organization. Occupational diseases and accidents are subject to mandatory registration by the employer. The procedure for registration and professional examination of occupational diseases and accidents is established by the Government of the RA. The injured party or his/her representative may participate in the official investigation of an accident during work or occupational disease, has the right to get acquainted with the investigation materials regarding the accident or occupational disease, to receive the official accident or occupational disease investigative act, and in case of disagreement, the results of the occupational examination t results may be appealed in administrative and / or judicial procedures.

7.1.1. Risk Assessment

56. According to Order of the Minister of Health “On approval of the sanitary rules and norms N2.2-002-05 “Hygienic classification of labor according to the harmful and dangerous factors of the workplace, heaviness and stress indexes of the labor process, based on hygienic standards, working conditions are classified into 4 categories,

- optimal working conditions (1st class) - the health of employees is maintained and prerequisites are created to ensure a high level of workability;

- permissible working conditions (2nd class) - are characterized by levels of factors of production environment and working process that do not violate the minimum hygiene standards laid down for the workplace;

- harmful working conditions (3rd class) - characterized by harmful production factors breaching the hygiene standards and adversely affecting the health of the worker. According to the hygiene standards violations, the working conditions are further subdivided into four degrees.

,**- Dangerous (Emergency) Conditions of Work (Class 4)** - are characterized by levels of production factors the impact of which during (or part of) work shift creates a risk of severe occupational injury and a threat to life.

7.1.2. Collective Protection Means

57. The Labor Code of the RA provides for a requirement to provide workers with collective protection means. In particular, According to Article 247 the workplace shall be equipped with collective protection means. This regulation is necessary but not sufficient. There is no technical regulation for collective protection means in the RA.

7.1.3. Individual Protection Means

58. According to clause 4.1.3 of the Order of the Minister of Health "On approval of the sanitary rules and norms N2.2-002-05 on "Hygienic classification of labor according to the harmful and dangerous factors of the workplace, heaviness and stress indexes of the labor process", workers in the workplace, depending on the types of hazardous and harmful factors in the production environment and work process, use protective clothing, protection means for hearing, visual and respiratory organs, feet, hands and head, which are selected according to their protective, medical and hygienic conditions:

- they include supplier instructions or manufacturer's instructions on expiry date, maintenance, use, service and quality control,

- they have an indicator of noise level reduction and/or labeling,
- they are fireproof to protect against thermal radiation to prevent the danger of self-ignition at work,
- Provide thermal insulation and mechanical strength of the frost protected part of the body (including fingers and toes)
- Ensure minimal penetration of harmful chemicals, compounds and industrial dust from workplaces and workplace air to protect workers' respiratory organs.

The Governmental Decree of RA "On approval of the technical regulation of individual protection means" establishes safety requirements for the following personal protective equipment: protective clothing, foot protection, eye protection, hearing protection, head and face protection, respiratory organs protection, protection against falls, drowning protection means intended for use in water.

7.1.4. Safety Instructions

59. See paragraph 57 of this study.

7.1.5. Emergency Procedures

60. Article 256 of the Labor Code of the RA states that in the event of accidents at work or acute illnesses, the employer shall be obliged to provide workers with first aid.

7.2. Substances Hazardous for Health

61. The Labor Code of the RA establishes a requirement for mandatory medical examination. In particular, workers who may be exposed to occupational risk factors in the workplace are required to undergo a medical examination in accordance with the employer-approved schedule prior to their employment and in a periodical manner. Employees whose occupational risk is

attributable to the use of hazardous substances during work are subject to regular medical examination in the event of a change of workplace or work in the same organization.

Organizations where hazardous substances are produced, used, stored, are required to have a plan of action on warning of a potential accident and elimination of the consequences in accordance with the legislation.

In an organization where hazardous materials are used, sanitary and personal hygiene rooms shall be furnished with special requirements for the furnishing of such rooms. Requirements for furnishing the rooms of sanitary and personal hygiene are laid down in normative legal acts on the safety and health of workers, taking into account the nature of the work, the materials used and the number of employees.

According to paragraph 74 of the Order of the Minister of Health “On approval of hygienic and epidemiological requirements N 2.1.7.001-9 for use, transportation and storage of hazardous chemical waste and hazardous chemical substances”, the premises for storage, packaging and filling of hazardous chemicals shall be equipped with an automatic or an indicator system for the presence of hazardous chemicals in the air of the area of those premises.

Works related to the transportation of hazardous chemicals should be utmost automated.

Persons performing activities at the facilities for the storage, transportation and disposal of hazardous chemicals shall be subject to mandatory preliminary and periodic medical examinations on the impact of hazardous and dangerous factors on production environment and working process according to the procedure established by the RA Government Decree N 1089-N of July 15, 2004 on "Approval of the lists of obligatory preliminary (at the moment of employment) and periodic medical

examination of specific population groups affected by hazardous and dangerous factors during working processes and working environment, and the procedure for the hygienic characterization of working conditions".

Persons in contact with hazardous chemicals and engaged in handling, supplying, loading and unloading of hazardous chemicals shall be provided with individual protection in accordance with the requirements of Governmental Decree of RA N1631 "On approval of the technical regulation of individual protection means" of 11 November 2004 (outerwear, special shoes, breathalyzer, respirator, protective goggles, gloves and / or mittens. with respirators and breathalyzers spare capsules and boxes are also provided). Individual protection means are chosen taking into account the hazardousness class and physicochemical properties of the waste, the nature of the working conditions, as well as the individual sizes of the employees.

7.3. Fire and Explosion Safety

62. According to Article 30 of the RA Law on Fire safety, organizations have the right:

- establish, reorganize and dissolve fire protection units maintained at their own expense, including in accordance with a contract terms with the State fire service,
- submit proposals to the public administration and local self-government bodies on fire safety;
- work to identify the circumstances and causes of the occurred fire;
- obtain information on fire safety issues, including from fire management authorities and subdivisions.

Organizations are required to:

- comply with the requirements of the fire safety regulations, as well as comply with the orders, decisions and other legal requirements of fire protection officials;
- Develop and implement measures to ensure fire safety;

- include fire safety issues in collective agreements (agreements);
- keep fire-fighting systems and devices in order, including primary fire-fighting devices, and prohibit their unintentional use;
- set up fire protection management bodies and subdivisions in accordance with the requirements of fire safety regulations, including contracts concluded with the State fire service;
- to support fire protection in relation to the work of firefighting, identifying the causes and conditions of fires, as well as breaches of fire safety normative documents and persons responsible for the fire;
- provide necessary forces and resources, fuel supplies, as well as food and recreation facilities, subject to compensation, in the event of fire extinguishers within the organization, as prescribed;
- provide fire protection officials with access to the organization's premises, buildings, buildings and other facilities;
- provide information and documentation on the state of the organization's fire safety, including the fire hazard of their products, as well as previously occurred fires in their area and their consequences at the request of state fire inspection officials;
- to immediately alert the fire protection authorities of the occurrence of fires, changes in the state of the fire systems or equipment, changes in the condition of roads and passages.

The rules set forth in the Decree of the Minister of Territorial Administration and Emergency Situations “On approval of fire safety rules and declaring void the order of the Minister of Emergency Situations N263 from 26 July 2012“ are mandatory for public administration and local self-government bodies, organizations (hereinafter referred to as entities) and citizens. The Decree defines general organizational measures, fire safety requirements for buildings, structures, areas and construction sites, fire safety requirements for electrical equipment, fire safety requirements for heating and ventilation systems, maintenance of fire-fighting water supply network, the procedure of fire alarm and fire extinguishing, anti-smoke systems, maintenance of facilities and organization of evacuation, and for actions in the event of a fire.

Appendix 2 of the Order sets out the classification of fire-hazardous buildings of categories A, B, V, G, D. Annex 3 sets out the criteria for providing buildings and structures with handheld fire extinguishers.

7.3.1. Flammable Gas

63. According to point 167 of the Decree No. 263 of July 26, 2012 of RA Minister of Territorial Administration and Emergency Situations "On Approving the Fire Safety Rules and Declaring Void" pipelines for the transportation of combustible liquids, flammable dusts, flammable gases over warehouses, industrial buildings is forbidden.

The supply of combustible, flammable liquids and flammable gas to the workplaces should be centralized. It is permissible to supply the workplaces with the specified quantity of liquids and gas only in a safe container.

The parking of vehicles for the transportation of flammable and combustible liquids and flammable gases shall not be permitted in parking lots, under sheds and in open areas.

Delivery of combustible and flammable materials and flammable gases to workplaces is to be carried out in a centralized manner. It is not permitted to ship combustible and flammable materials to workplaces with open container.

In the case of installation of flammable and combustible liquid and flammable gas pipelines in buildings, it is necessary to:
- ensure airtight sealing with non-combustible materials the crossings (gaps, asymmetries) of pipelines through buildings and their fundament.
- Use gas proof interfaces (membranes) while crossing from one building to another (open and closed).

Pumps with no-chamber and frontal seal for flammable gases and combustible liquids shall be used. The pipelines that are used on a part-time basis should be fitted with hydro-valves.

During the transportation of explosive flammable materials, it is not permitted to carry flammable gas cylinders without protective buckles.

Cylinders with flammable gases, combustible and flammable liquids, aerosol packages should be protected from the sun and other thermal effects.

7.3.2. Special setting for the connection and shutdown of the gas appliance

64. The legislation of the RA does not provide a specific regulation on the safety of the connection and shutdown of a gas appliance.

7.3.3. Zoning of Explosive Areas

65. The legislation of the RA does not require zoning of explosive areas.

7.4. Noise Pollution

66. See paragraph 35 of this study.

7.5. Equipment subject to monitored

67. The legislation of the RA does not require monitoring of individual equipment.

7.5.1. Periodic testing of Machinery/Equipment

68. The legislation of the RA does not provide requirements for periodic testing of individual machinery / equipment.

7.5.2. Periodic testing of electrical equipment

69. According to the RA legislation, there is no requirement for regular testing of individual electrical equipment.

7.5.3. Periodic Testing of Pressure Equipment

70. According to the RA legislation, there is no requirement for regular testing of individual pressure equipment.

7.6. Control

71. Pursuant to Article 262 of the Labor Code of the RA, control over the safety and health of workers is exercised by an inspection body authorized by the Government of the RA to ensure the safety of work.

8. FUEL

72. The Customs Union Technical Regulation "Requirements for aviation and vehicle petrol, fuel for vessels and diesel fuel, fuel for reactive engines and fuel oil" establishes rules for circulation of fuels in the market, safety requirements and compliance assurance. No regulations for the quality of syngas, bio-oil and biochar are stipulated by this Technical Regulation. At the same time, separate requirements for vehicle petrol, diesel fuel, fuel oil, reactive engine oil, and aviation petrol and vessel fuel are defined. It is mandatory that the fuel on the market shall be accompanied by compliance certificate. The requirements for fuel quality resulting from P&G are not provided by the current legislation.